New Winstar Enterprise Co., Ltd.

Side Channel Blower

&

Accessories

Content

Company Introduction 4
Construction & Specific 5
Parts and Illustration 6
Appliation For Blowing 8
Application for Suction 9
Single Phase AC IP55 50Hz/60Hz 10
Three Phase AC IP55 50 Hz 12
Three Phase AC IP55 50 Hz 14
Three Phase AC IP55 60 Hz 15
Three Phase AC IP55 60 Hz 17
Single Stage 18
Dimension 19
HB 129 Series 19
HB 229 Series 19
HB 229 L 19
HB 329 Series 19
HB 329 L 19
HB 429 Series 20
HB 429 L 20
HB 529/629 Series 20
HB 529/629 L 20
HB 729/829 Series 20

HB 729/829 L 20
HB 919/929/939 21
Double Stage 22
Dimension 23
HB 2308 Serial 23
HB 33 Serial 23
HB 43 Serial 23
HB 63 Serial 24
HB 64 Serial 24
HB 83 Serial 24
HB 84 Serial 25
HB 93 Serial 25
HB 94 Serial 25
V-Belt Blower 26
Single Stage 26
Double Stage 27
Accessories 28
Pressure Relief 28
Silencer 28
MF Type Suction Filter 29
Threaded Flange (mm) 29
Three Pipe (mm) 30
Footprint Dimensions for Vertical/Horizontal Mounting 31

Company Introduction

We Have A Profession Technical and Manufacturing Team And Has Been Selling *SIROCCO* Brand Word-Wide.

The Company Has *SIROCCO* Brand More Than Twenty Years Of High-Pressure Blower Field Experience With Spirit Of Providing Quick Service And Technical Based High Quality Products For Our Most Valuable Customers And Potential Business Partners.

Your Interests and Enquires Are Always Welcome.

A Brand New Set Of Modules Have Been Invented To Upgrade Quality Of Our High-Pressure Blowers Leading The New Series Of Blowers Are Both In Appearance, Air Pressure And Volume More Desirable Than The Old Series.

Rigorous Tests And Inspections Have Conducted For Each Blower Ship Out Of The Factory For Firm 100% High Quality Products Deliver To Customers.

CE

Verification of Compliance

Applicant:New Winstar Enterprise Co., Ltd.

Address:SF-4, No. 160, Chung Cheng Road, Chung Ho City, Taipei Hsien, Taiwan

Product:Side Channel Blower

Model/type: HB-429, HB Series

Date of issue: December 04,2007.

Based upon review of the test report, the product mentioned above are in compliance with the safety requirements of the 2006/95/EC Low Voltage Directive.
For the safety testing of complying with the 2006/95/EC Low Voltage Directive, the following harmonized standard has been applied:

EN 60034-1:2004

LI Ming Technology Ltd
Safety Testing Lab

Manager Wu/Project Manager

Copyright of this certification of compliance is owned by Li Ming Technology Ltd/Safety Testing Lab, and may not be reproduced unless than in full and with the prior approval of manager of Li Ming Technology Ltd/Safety Testing Lab.

No.: LM20071390

ECO AIR® SIROCCO®

Construction & Specific

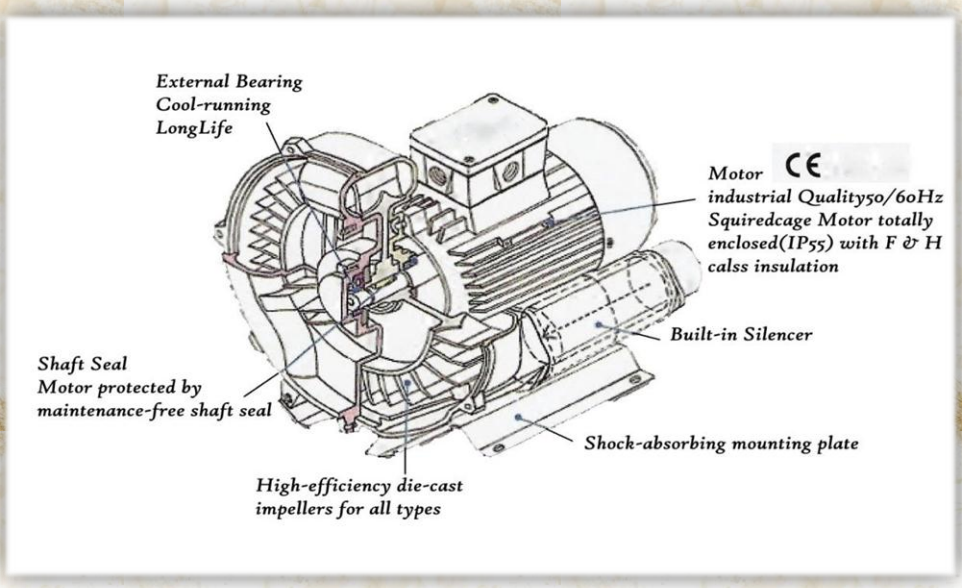

No Oily Odors

The impeller rotates with absolutely no contact between it and the housing.

This means no lubrication is required, guaranteeing 100% oil-free operation.

Low Noise and Vibration

The use of direct-driving low-noise motors and integral silencers ensure a low noise level.

Dynamic balancing minimizes vibration.

High Efficiency

Under serious QC control, the parts used in SIROCCO blower are of top quality.

All blowers are made by professional technicians.

The impeller rotates with absolutely no contact between it and the housing.

This means no lubrication is required, guaranteeing 100% oil-free operation.

Easy to Install

The blower is a complete unit ready for immediate installation either as a vacuum pump or as a compressor.

The unit can be mounted in any position, horizontally or vertically.

Rugged

The cast for the impeller and the motor are individual to be made by aluminum.

The blower has the highly-developed design which results in a pump construction with one moving part, a feature ensuring maximum operating reliability. Maintenance free!

Parts and Illustration

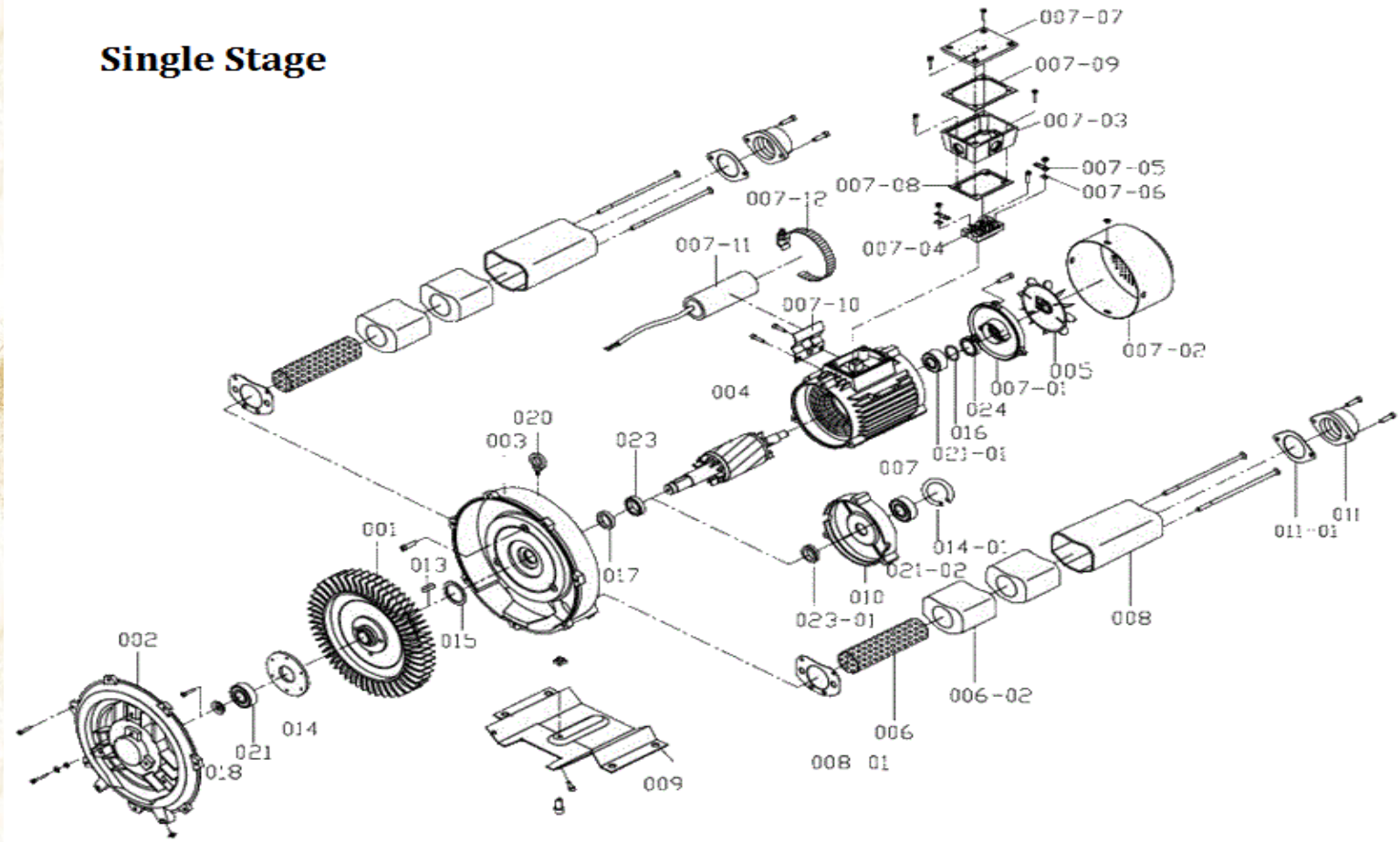

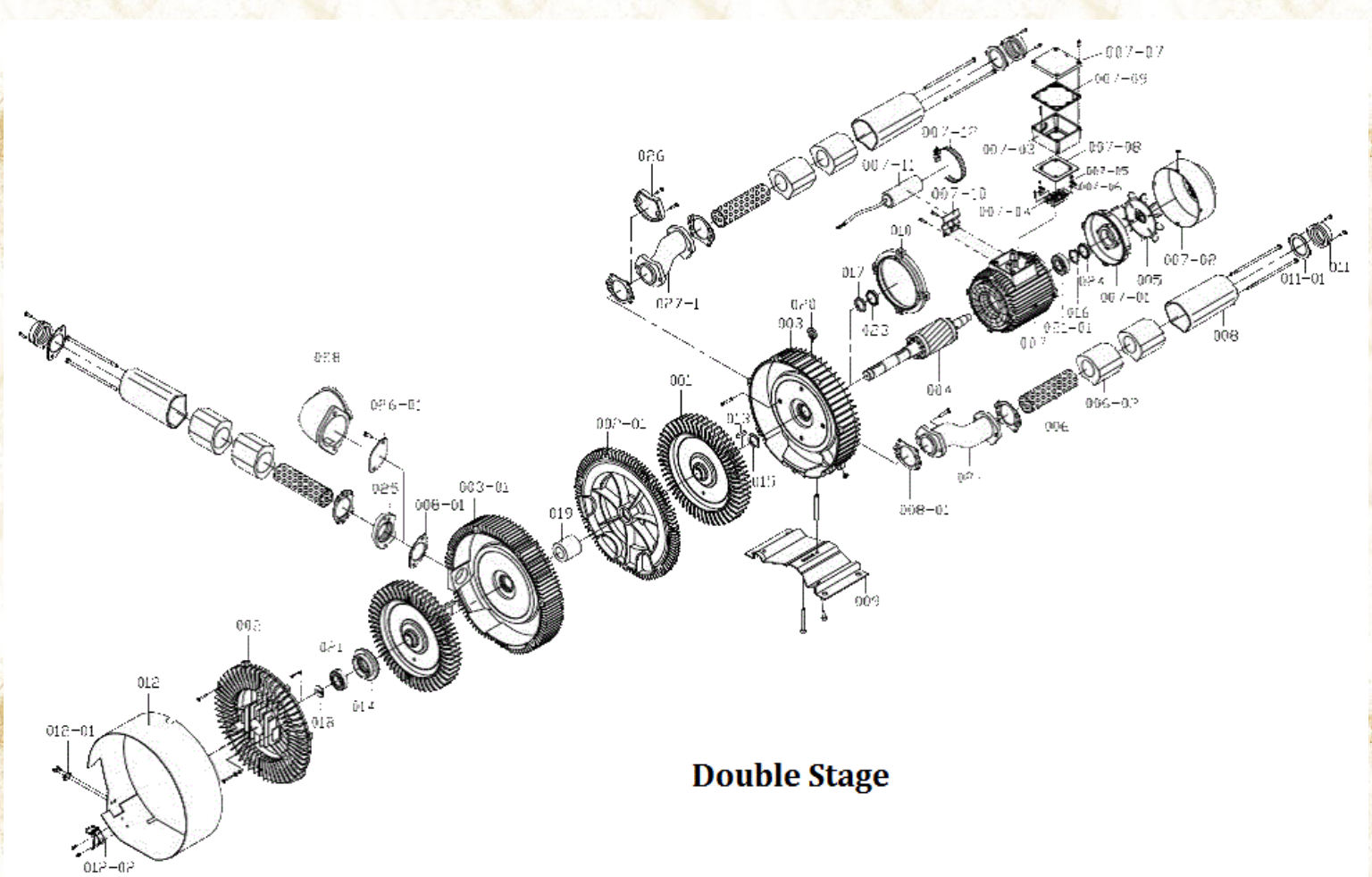

Item No.	PARTS NAME	Item No.	PARTS NAME	Item No.	PARTS NAME
001	Impeller	007-08	Terminal box washer	015	Washer
002	Compressor cover	007-09	Terminal cover washer	016	Ware washer
002-01	Middle compressor cover	007-10	Capacitor washer	017	Cotton seal
003	Compressor housing	007-11	Capacitor	018	Washer
003-01	Middle compressor housing	007-12	Steel clip	020	Bronze ring
004	Rotor	008	Silencer housing	021	Front bearing
005	Fan	008-01	Silencer washer	021-01	Rear bearing
006	Silencer mesh pipe	009	Mounting plate	021-02	Front bearing
006-02	Silencer sponge	010	Middle motor cover	023	Front oil seal
007	Motor	011	Inlet/outlet	023-01	VA-seal
007-01	Motor cover	011-01	Inlet/outlet washer	024	Rear oil seal
007-02	Fan cover	012	Protection steel skin	025	Silencer socket
007-03	Terminal box	012-01	Buckle (up)	026	Outlet cover
007-04	Wire socket	012-02	Buckle (down)	026-01	Cover
007-05	Wire connection slice	013	Rotor pin	027	Extend pipe
007-06	Fixed slice	014	Bearing washer	027-1	Extend pipe
007-07	Terminal cover	014-01	Bearing washer	028	90°extend pipe

Appliation For Blowing

Purifying Tank

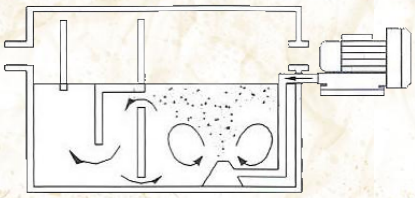

Car-Wash Blow-Dry Equipment

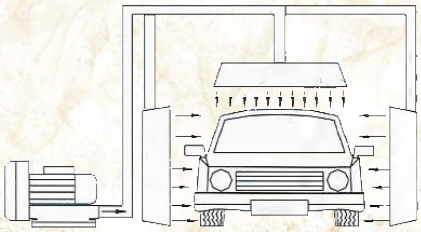

Floating Element of Paper Cutter

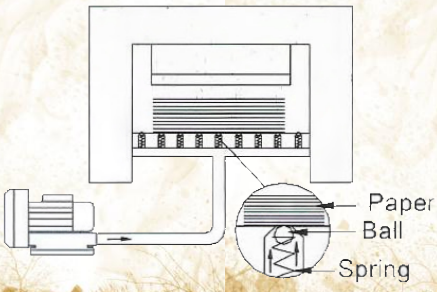

Bottle Air-Drying

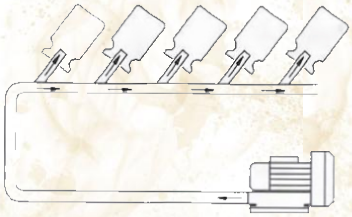

Bubble Bath

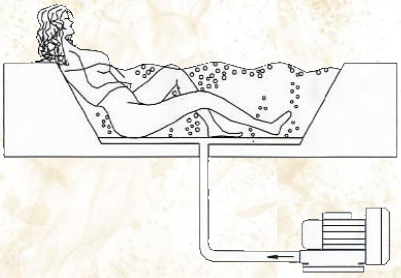

Air Drying After Printing

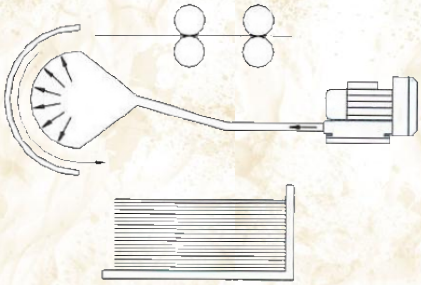

Fermentation

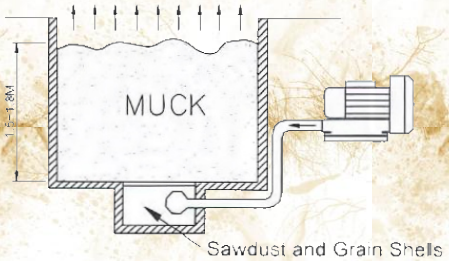

Oxygen Supply for Culture Field

Combustion Furnace

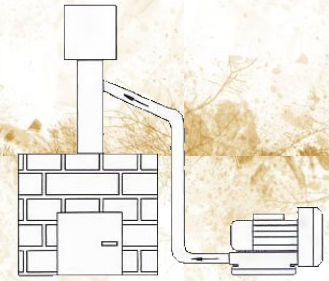

Vegetable & Fruit Washer

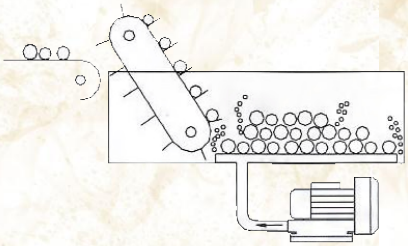

Powder & Granule Conveyor

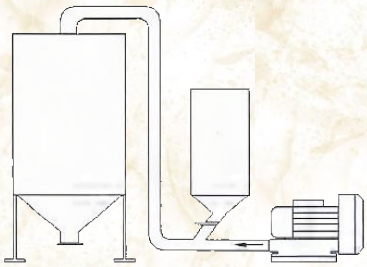

Electrolyte Stirrer

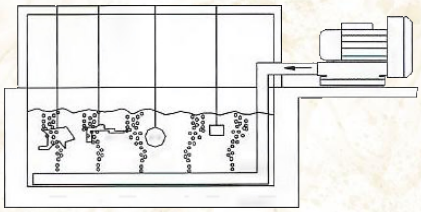

Application for Suction

Bean Washing Equipment

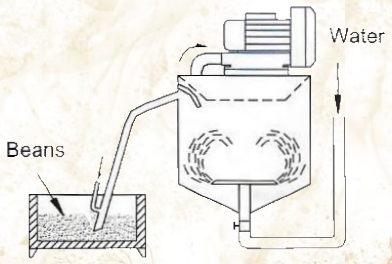

Work Conveyance Equipment

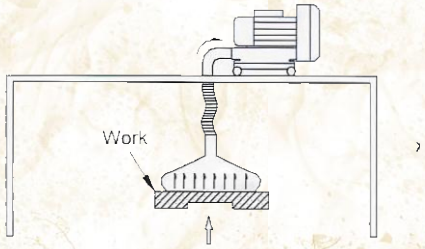

Powder & Granule Conveyor

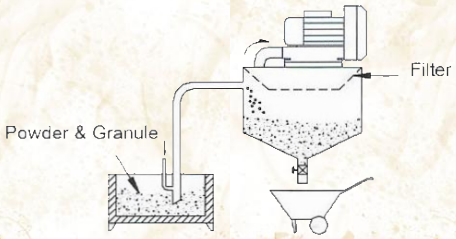

Suction at the Working Site

Sucking Industrial Dust

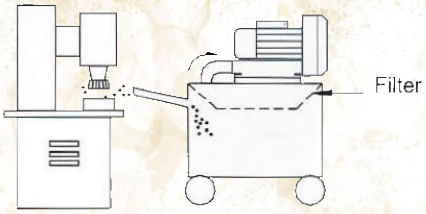

Paperboard Conveyor

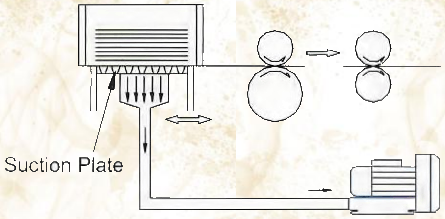

Degasification Treatment

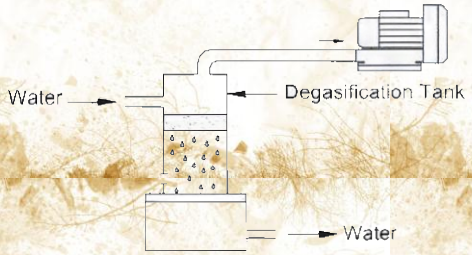

Bottle Filling Machine

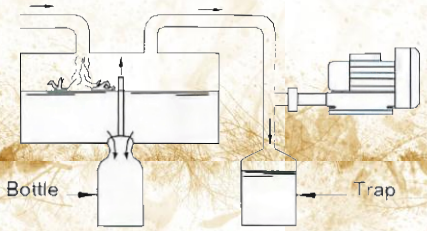

Automatic Weaving Machine

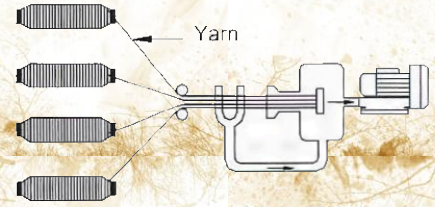

Paper Cutting Equipment

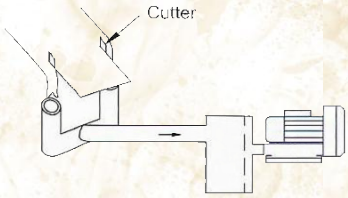

Printing Paper Conveyor

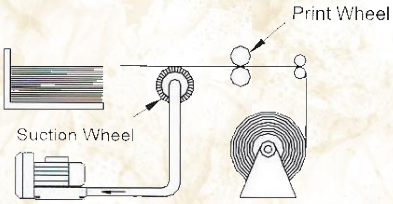

Dust-Removing Equipment

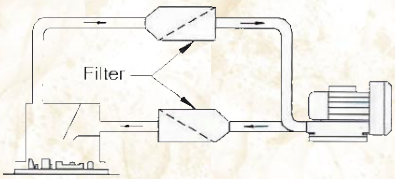

Single Phase AC IP55 50Hz/60Hz

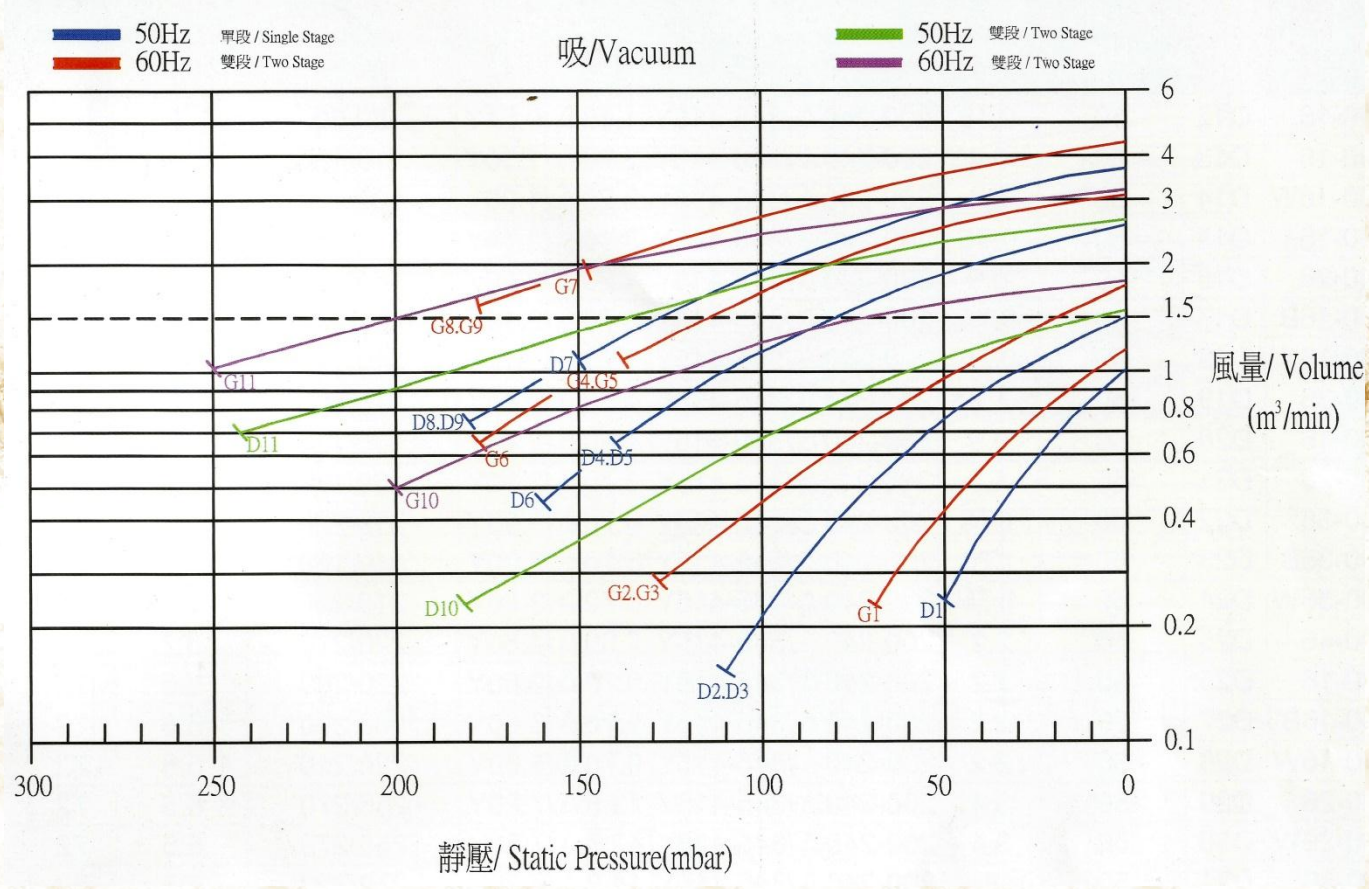

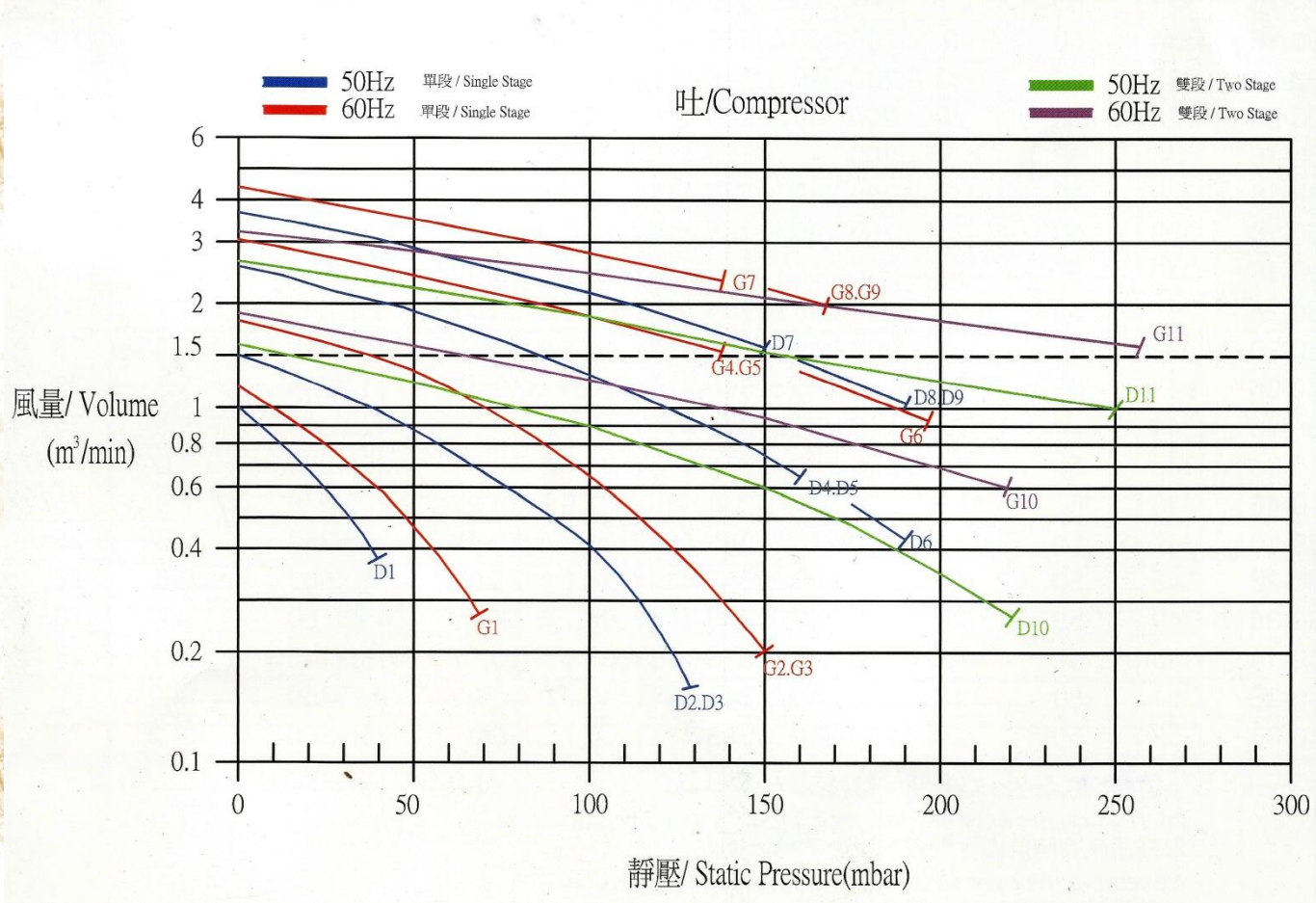

Model	Curve No.	Frequency	Output	Voltage	Current	Vacuum / Compress	Max Airflow	Noise	Weight
		(Hz)	(kW)	(V)	(A)	(mbar)	(m^3/min)	(dB)A	(Kg)
HB-129	D1	50	0.18	100-120/200-240	2.50/1.25	50/40	1.0	52	6.5
	G1	60	0.2	110-120/220-240	2.60/1.30	70/70	1.2	55	
HB-229	D2	50	0.4	100-120/200-240	5.40/2.70	110/130	1.5	58	11.5
	G2	60	0.5	110-120/220-240	7.80/3.90	130/150	1.8	61	
HB-229L	D3	50	0.4	100-120/200-240	5.80/2.90	110/130	1.5	58	12
	G3	60	0.5	110-120/220-240	7.80/3.90	130/150	1.8	61	
HB-329	D4	50	0.75	100-120/200-240	14.0/7.00	140/150	2.6	63	16
	G4	60	0.85	110-120/220-240	16.0/8.00	140/140	3.1	64	
HB-329L	D5	50	0.75	100-120/200-240	11.6/5.80	140/150	2.5	63	16.5
	G5	60	0.85	110-120/220-240	13.0/6.50	140/140	3.1	64	
HB-339	D6	50	1.1	100-120/200-240	14.0/7.00	160/190	2.6	63	16.5
	G6	60	1.3	110-120/220-240	16.0/8.00	180/190	3.1	64	
HB-429-2	D7	50	1.1	100-120/200-240	15.8/7.70	150/150	3.7	70	23.5
	G7	60	1.3	110-120/220-240	19.2/9.60	150/140	4.4	73	
HB-429	D8	50	1.5	100-120/200-240	20.0/10.0	180/190	3.7	70	26
	G8	60	1.75	110-120/220-240	22.8/11.4	180/170	4.4	73	
HB-429L	D9	50	1.5	100-120/200-240	20.0/10.0	180/190	3.7	70	26.5
	G9	60	1.75	110-120/220-240	22.8/11.4	180/170	4.4	73	
HB-2308	D10	50	0.75	100-120/200-240	9.20/4.50	180/220	1.6	60	17.5
	G10	60	0.85	110-120/220-240	11.0/5.40	200/220	1.8	66	
HB-3315	D11	50	1.5	100-120/200-240	20.0/10.0	240/250	2.6	66	28.5
	G11	60	1.75	110-120/220-240	22.8/11.4	250/260	3.1	69	

Voltages Code	50Hz	60Hz	Model	Specification
0 :	100-120V	110-120V	HB-XXX- L	Waterproof
1 :	100-120/200-240V	110-120/220-240V	HB-XXX - 9	Low Pressure
2 :	185-220V	200-240V	HB-XXX - L	Terminal box on the left
3 :	200-220V	220-240V	HB-XXX - R	Terminal box on the right
4 :	200-240VΔ	200-240VΔ		
5 :	185-225Δ/320-390Y	200-240Δ/345-415Y		
6 :	200-240Δ/345-415Y	220-275Δ/380-480Y		
7 : Special Volt				
8 :	345-415Δ/600-720Y	380-480Δ/660-830Y		
9 :	400-460Δ/690-790Y	415-500Δ/720-860Y		

Three Phase AC IP55 50 Hz

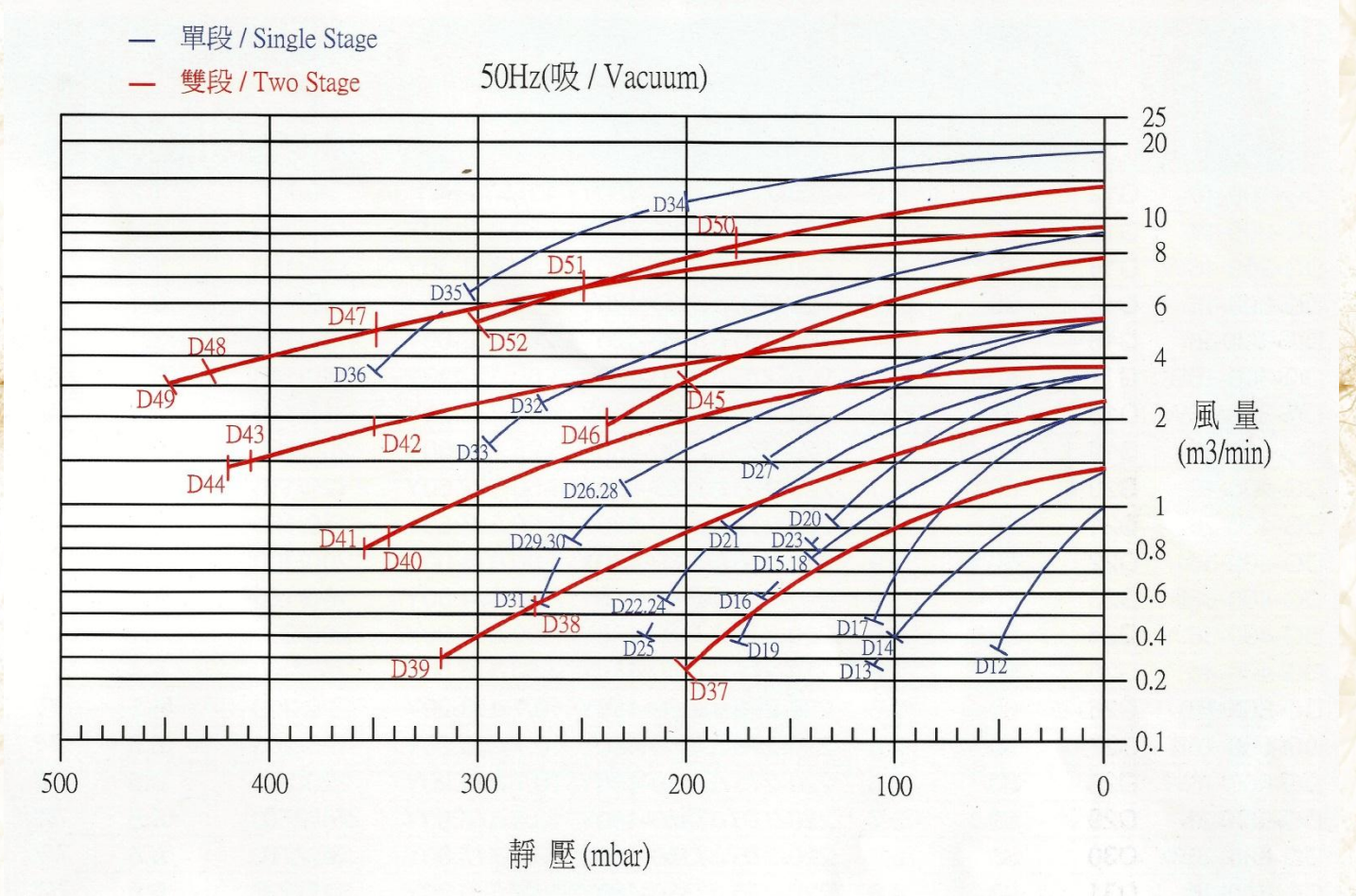

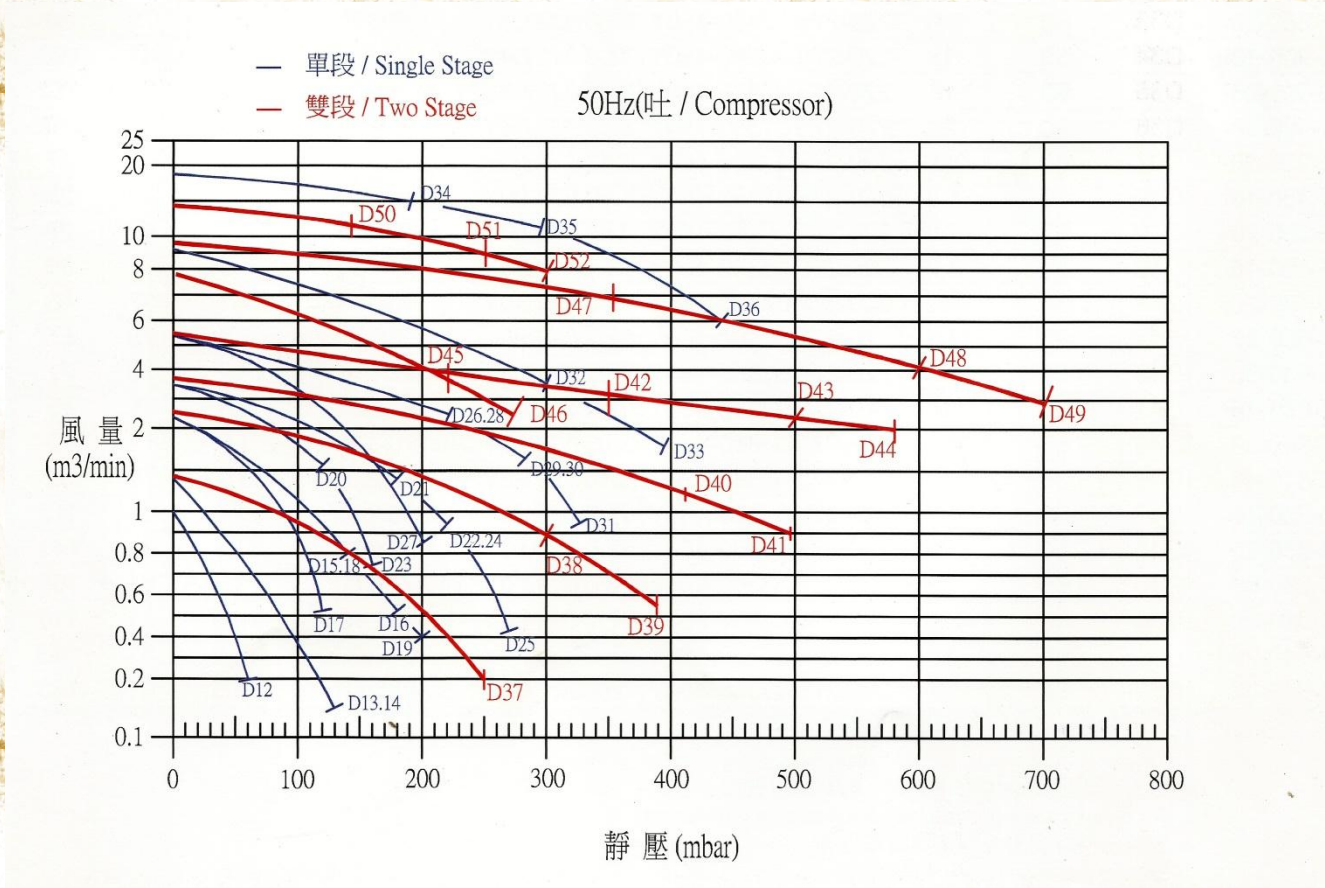

Model	Curve No.	Frequency	Output	Voltage	Current	Vacuum / Compressor	Max Airflow	Noise	Weight
		(Hz)	(kW)	(V)	(A)	(mbar)	(m^3/min)	(dB)A	(Kg)
HB-129	D12	50	0.18	200-240Δ/345-415Y	1.10Δ/0.64Y	50/60	1	52	6.5
HB-229	D13	50	0.4	200-240Δ/345-415Y	2.20Δ/1.30Y	110/130	1.5	58	10.5
HB-229L	D14	50	0.4	200-240Δ/345-415Y	2.20Δ/1.30Y	100/130	1.5	58	11
HB-329	D15	50	0.75	200-240Δ/345-415Y	3.70Δ/2.14Y	140/140	2.6	63	14
HB-329-1	D16	50	0.9	200-240Δ/345-415Y	4.20Δ/2.40Y	165/180	2.6	63	15
HB-329-9	D17	50	0.75	200-240Δ/345-415Y	3.70Δ/2.14Y	110/120	2.6	63	14
HB-329L	D18	50	0.75	200-240Δ/345-415Y	3.70Δ/2.14Y	140/140	2.6	63	14.5
HB-339	D19	50	1.3	200-240Δ/345-415Y	4.60Δ/2.65Y	175/200	2.6	63	16
HB-429-1	D20	50	0.9	200-240Δ/345-415Y	4.20Δ/2.40Y	130/120	3.7	70	20.5
HB-429-2	D21	50	1.3	200-240Δ/345-415Y	5.70Δ/3.30Y	180/180	3.7	70	22
HB-429	D22	50	1.75	200-240Δ/345-415Y	6.70Δ/3.90Y	210/220	3.7	70	23
HB-429-9	D23	50	1.75	200-240Δ/345-415Y	6.70Δ/3.90Y	140/160	3.7	70	23
HB-429L	D24	50	1.75	200-240Δ/345-415Y	6.70Δ/3.90Y	210/220	3.7	70	23.5
HB-439	D25	50	2.2	200-240Δ/345-415Y	7.80Δ/4.50Y	220/270	3.7	70	26
HB-529	D26	50	2.2	200-240Δ/345-415Y	9.70Δ/5.60Y	220/210	5.5	72	32
HB-529-9	D27	50	2.2	200-240Δ/345-415Y	9.70Δ/5.60Y	160/200	5.5	72	32
HB-529L	D28	50	2.2	200-240Δ/345-415Y	9.70Δ/5.60Y	220/210	5.5	72	32.5
HB-629	D29	50	3.4	200-240Δ/345-415Y	12.5Δ/7.20Y	255/270	5.5	72	34
HB-629L	D30	50	3.4	200-240Δ/345-415Y	12.5Δ/7.20Y	255/270	5.5	72	35.5
HB-639	D31	50	4	200-240Δ/345-415Y	14.3Δ/8.20Y	270/320	5.5	72	37
HB-729	D32	50	5.5	200-240Δ/345-415Y	25.3Δ/14.6Y	270/290	9.5	74	77
HB-829	D33	50	7.5	200-240Δ/345-415Y	31.5Δ/18.2Y	295/390	9.5	74	88
HB-919	D34	50	9	200-240Δ/345-415Y	36.0Δ/20.8Y	200/190	18.9	76	100
HB-929	D35	50	13	200-240Δ/345-415Y	46.8Δ/27.0Y	290/270	18.9	76	112
HB-939	D36	50	20	200-240Δ/345-415Y	66.7Δ/38.6Y	350/440	18.9	76	159
HB-2308	D37	50	0.75	200-240Δ/345-415Y	3.45Δ/2.00Y	200/240	1.6	60	17
HB-3319	D38	50	1.75	200-240Δ/345-415Y	6.70Δ/3.90Y	275/300	2.6	66	25
HB-3326	D39	50	2.2	200-240Δ/345-415Y	7.80Δ/4.50Y	320/390	2.6	66	28
HB-4337	D40	50	3.4	200-240Δ/345-415Y	12.5Δ/7.20Y	345/410	3.7	74	40
HB-4346	D41	50	4	200-240Δ/345-415Y	14.3Δ/8.20Y	355/460	3.7	74	43
HB-6346	D42	50	4	200-240Δ/345-415Y	14.3Δ/8.20Y	350/350	5.5	75	55
HB-6335	D43	50	5.5	200-240Δ/345-415Y	21.6Δ/12.5Y	410/500	5.5	75	72
HB-6375	D44	50	7.5	200-240Δ/345-415Y	31.5Δ/18.2Y	420/580	5.5	75	82
HB-6455	D45	50	5.5	200-240Δ/345-415Y	21.6Δ/12.5Y	200/220	7.9	75	72
HB-6475	D46	50	7.5	200-240Δ/345-415Y	31.5Δ/18.2Y	240/275	7.9	75	82
HB-8310	D47	50	7.5	200-240Δ/345-415Y	31.5Δ/18.2Y	350/350	9.5	76	112
HB-8315	D48	50	13	200-240Δ/345-415Y	46.8Δ/27.0Y	430/600	9.5	76	142
HB-8320	D49	50	20	200-240Δ/345-415Y	66.7Δ/38.6Y	450/700	9.6	76	160
HB-8410	D50	50	7.5	200-240Δ/345-415Y	31.5Δ/18.2Y	180/145	14.2	76	110
HB-8415	D51	50	13	200-240Δ/345-415Y	46.8Δ/27.0Y	250/250	14.2	76	140
HB-8420	D52	50	20	200-240Δ/345-415Y	66.7Δ/38.6Y	300/300	14.2	76	160

Three Phase AC IP55 50 Hz

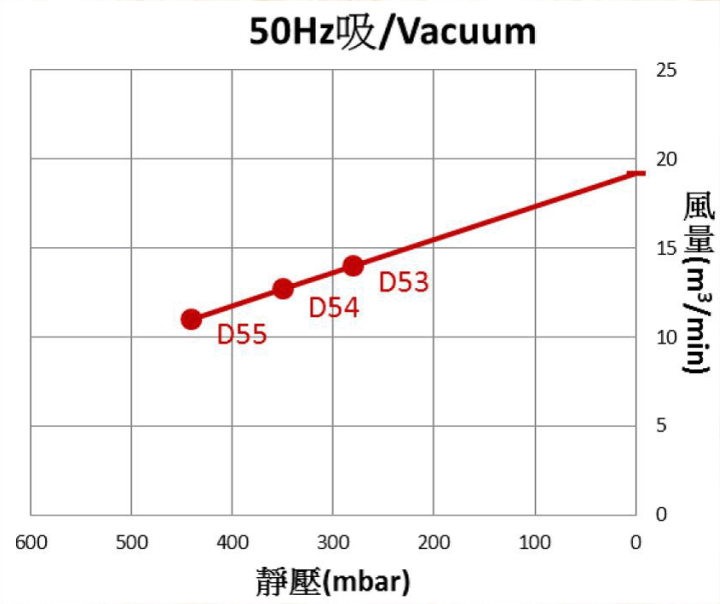

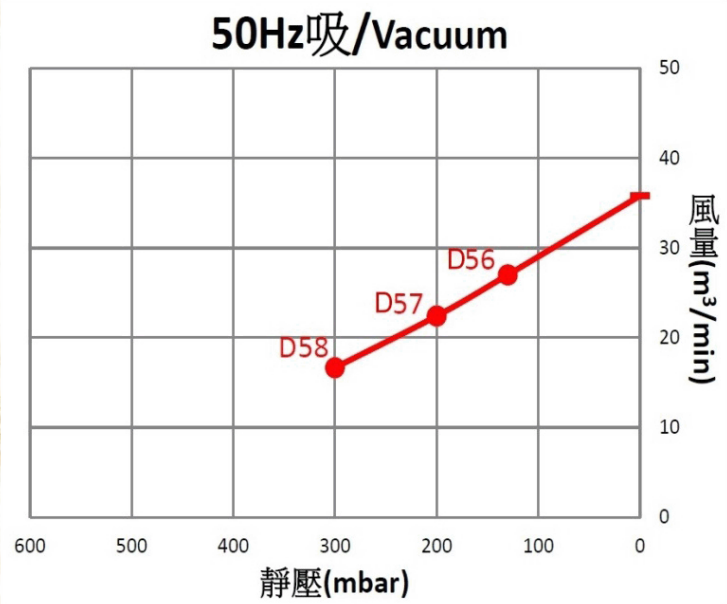

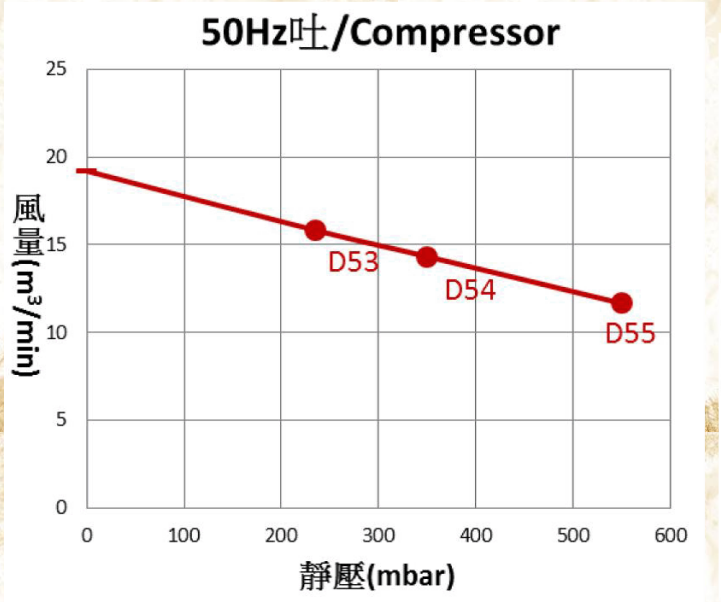

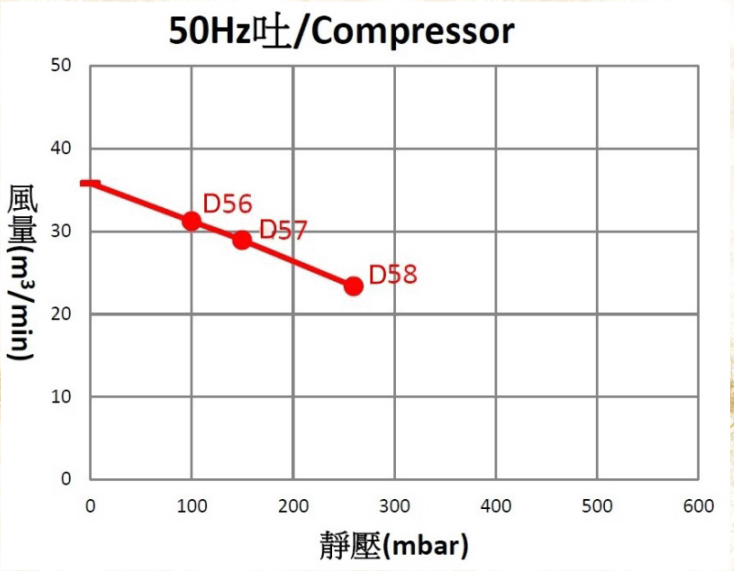

Model	Curve No.	Frequency	Output	Voltage	Current	Vacuum / Compressor	Max Airflow	Noise	Weight
		(Hz)	(kW)	(V)	(A)	(mbar)	(m³/min)	(dB)A	(Kg)
HB-9310	D53	50	13	200-240Δ/345-415Y	46.8Δ/27.0Y	280/235	19.2	76	161
HB-9315	D54	50	20	200-240Δ/345-415Y	66.7Δ/38.6Y	360/350	19.2	76	184
HB-9320	D55	50	25	200-240Δ/345-415Y	88.5Δ/51.0Y	440/550	19.2	76	201
HB-9410	D56	50	13	200-240Δ/345-415Y	46.8Δ/27.0Y	130/100	35.8	75	185
HB-9415	D57	50	20	200-240Δ/345-415Y	66.7Δ/38.6Y	200/160	35.8	75	208
HB-9420	D58	50	25	200-240Δ/345-415Y	88.5Δ/51.0Y	300/260	35.8	75	225

Three Phase AC IP55 60 Hz

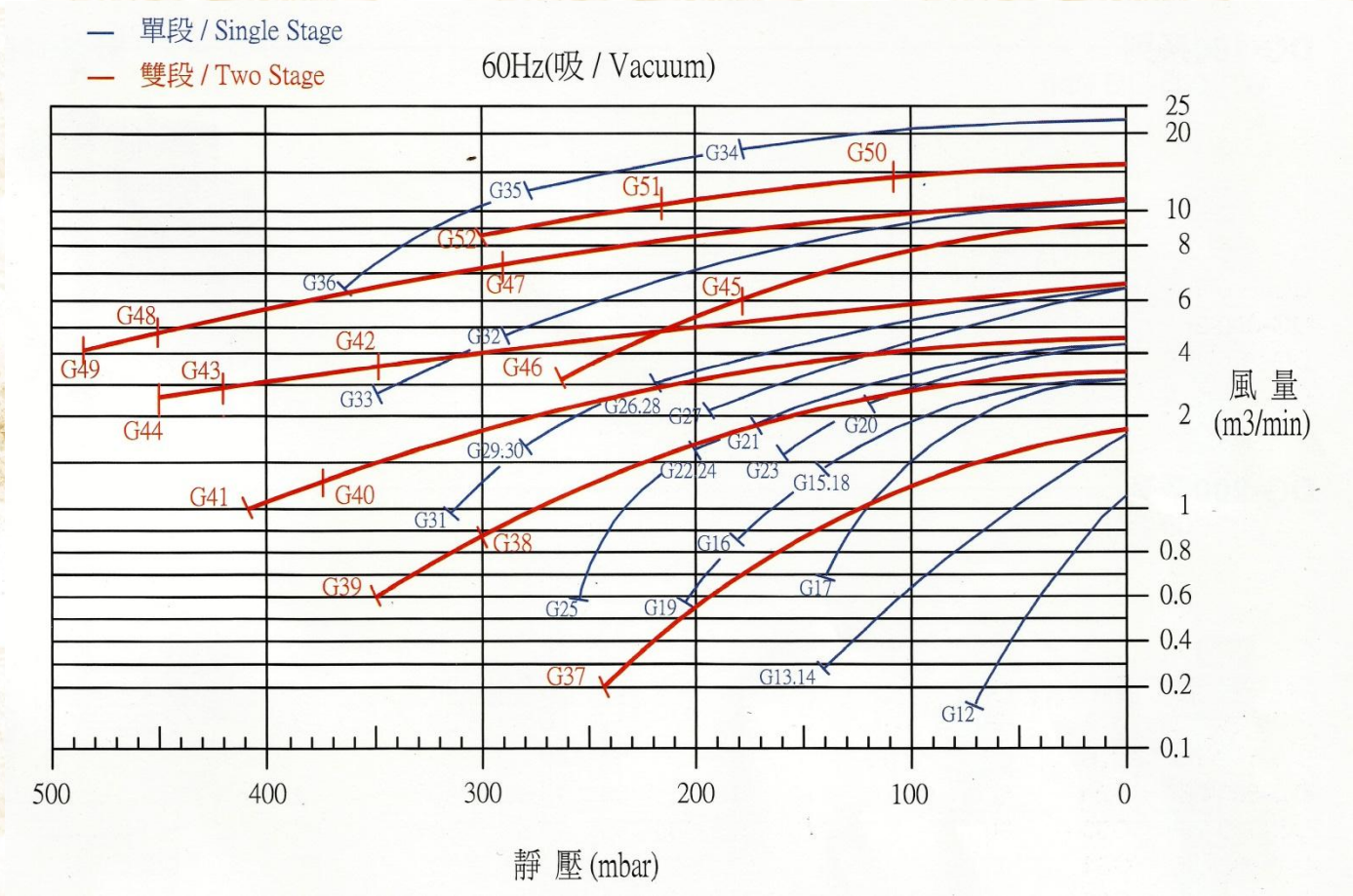

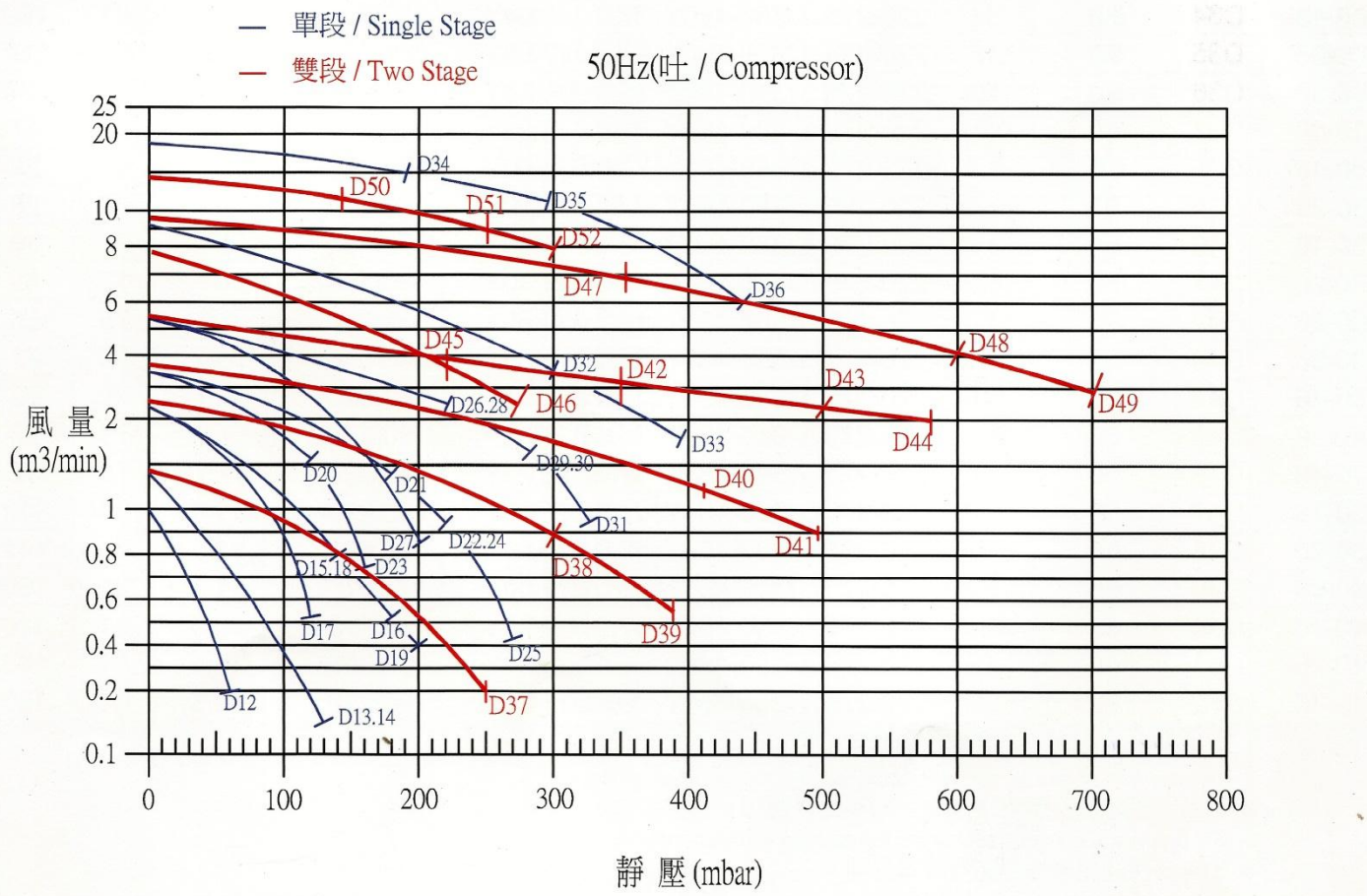

Model	Curve No.	Frequency	Output	Voltage	Current	Vacuum / Compressor	Max Airflow	Noise	Weight
		(Hz)	(kW)	(V)	(A)	(mbar)	(m^3/min)	(dB)A	(Kg)
HB-129	G12	60	0.2	220-275Δ/380-480Y	1.0Δ/0.64Y	70/70	1.2	55	6.5
HB-229	G13	60	0.5	220-275Δ/380-480Y	2.30Δ/1.30Y	140/160	1.8	61	11
HB-229L	G14	60	0.5	220-275Δ/380-480Y	2.30Δ/1.30Y	140/150	1.8	61	11.5
HB-329	G15	60	0.85	220-275Δ/380-480Y	3.90Δ/2.25Y	140/140	3.1	64	14
HB-329-1	G16	60	1.1	220-275Δ/380-480Y	4.50Δ/2.60Y	180/180	3.1	64	15
HB-329-9	G17	60	0.85	220-275Δ/380-480Y	3.60Δ/2.10Y	140/140	3.1	64	14
HB-329L	G18	60	0.85	220-275Δ/380-480Y	3.90Δ/2.25Y	140/140	3.1	64	14.5
HB-339	G19	60	1.5	220-275Δ/380-480Y	5.25Δ/3.00Y	205/230	3.1	64	16
HB-429-1	G20	60	1.1	220-275Δ/380-480Y	4.50Δ/2.60Y	120/110	4.4	73	20.5
HB-429-2	G21	60	1.5	220-275Δ/380-480Y	6.00Δ/3.50Y	170/160	4.4	73	22
HB-429	G22	60	1.9	220-275Δ/380-480Y	7.00Δ/4.00Y	200/200	4.4	73	23
HB-429-9	G23	60	1.9	220-275Δ/380-480Y	7.00Δ/4.00Y	160/180	4.4	73	23
HB-429L	G24	60	1.9	220-275Δ/380-480Y	7.00Δ/4.00Y	200/200	4.4	73	23.5
HB-439	G25	60	2.6	220-275Δ/380-480Y	9.50Δ/5.50Y	255/290	4.4	73	26
HB-529	G26	60	2.6	220-275Δ/380-480Y	10.7Δ/6.20Y	220/200	6.5	77	32
HB-529-9	G27	60	2.6	220-275Δ/380-480Y	10.7Δ/6.20Y	195/200	6.5	77	32
HB-529L	G28	60	2.6	220-275Δ/380-480Y	10.7Δ/6.20Y	220/200	6.5	77	32.5
HB-629	G29	60	3.7	220-275Δ/380-480Y	13.5Δ/7.80Y	280/270	6.5	77	34
HB-629L	G30	60	3.7	220-275Δ/380-480Y	13.5Δ/7.80Y	280/270	6.5	77	35.5
HB-639	G31	60	4.6	220-275Δ/380-480Y	16.2Δ/9.30Y	315/320	6.5	77	37
HB-729	G32	60	6.3	220-275Δ/380-480Y	29.5Δ/17.0Y	290/270	11.3	79	77
HB-829	G33	60	8.6	220-275Δ/380-480Y	37.0Δ/21.3Y	350/395	11.3	79	88
HB-919	G34	60	11	220-275Δ/380-480Y	37.0Δ/21.4Y	180/170	22.4	81	100
HB-929	G35	60	15	220-275Δ/380-480Y	51.5Δ/29.8Y	280/270	22.4	81	112
HB-939	G36	60	22	220-275Δ/380-480Y	76.0Δ/44.0Y	365/420	22.4	81	159
HB-2308	G37	60	0.85	220-275Δ/380-480Y	3.60Δ/2.08Y	245/245	1.8	67	17
HB-3319	G38	60	1.9	220-275Δ/380-480Y	7.00Δ/4.00Y	300/300	3.1	69	25
HB-3326	G39	60	2.6	220-275Δ/380-480Y	9.50Δ/5.50Y	350/420	3.1	69	28
HB-4337	G40	60	3.7	220-275Δ/380-480Y	13.5Δ/7.80Y	370/350	4.4	77	40
HB-4346	G41	60	4.6	220-275Δ/380-480Y	16.2Δ/9.30Y	410/475	4.4	77	43
HB-6346	G42	60	4.6	220-275Δ/380-480Y	16.2Δ/9.30Y	350/350	6.5	79	55
HB-6355	G43	60	6.3	220-275Δ/380-480Y	26.5Δ/15.3Y	420/500	6.5	79	72
HB-6375	G44	60	8.6	220-275Δ/380-480Y	37.0Δ/21.3Y	450/675	6.5	79	82
HB-6455	G45	60	6.3	220-275Δ/380-480Y	26.5Δ/15.3Y	180/170	9.5	79	72
HB-6475	G46	60	8.6	220-275Δ/380-480Y	37.0Δ/21.3Y	260/260	9.5	79	82
HB-8310	G47	60	8.6	220-275Δ/380-480Y	37.0Δ/21.3Y	290/290	11.3	81	112
HB-8315	G48	60	15	220-275Δ/380-480Y	52.0Δ/30.0Y	450/600	11.3	81	142
HB-8320	G49	60	22	220-275Δ/380-480Y	76.0Δ/44.0Y	470/780	11.3	81	160
HB-8410	G50	60	8.6	220-275Δ/380-480Y	37.0Δ/21.3Y	110/110	16.5	81	110
HB-8415	G51	60	15	220-275Δ/380-480Y	52.0Δ/30.0Y	230/200	16.5	81	140
HB-8420	G52	60	22	220-275Δ/380-480Y	76.0Δ/44.0Y	300/280	16.5	81	160

Three Phase AC IP55 60 Hz

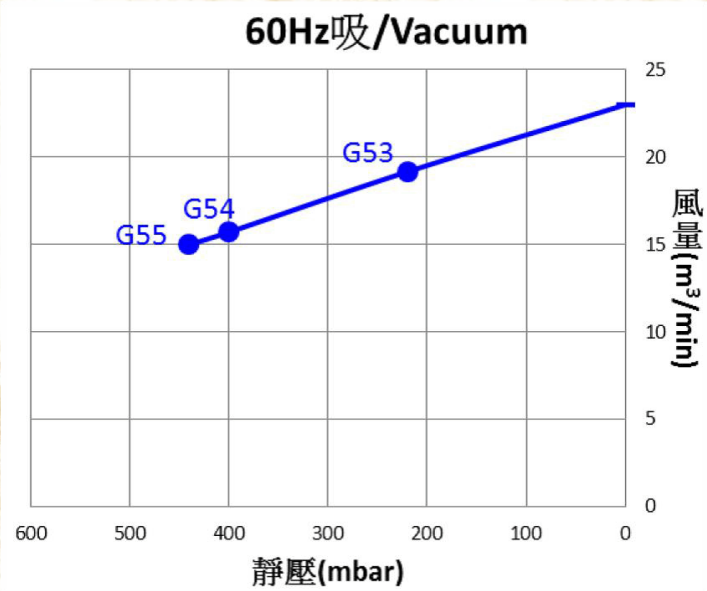

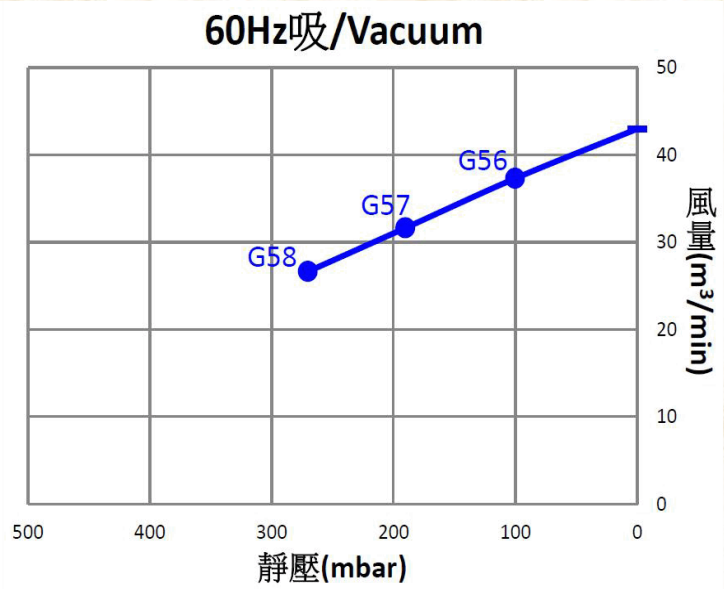

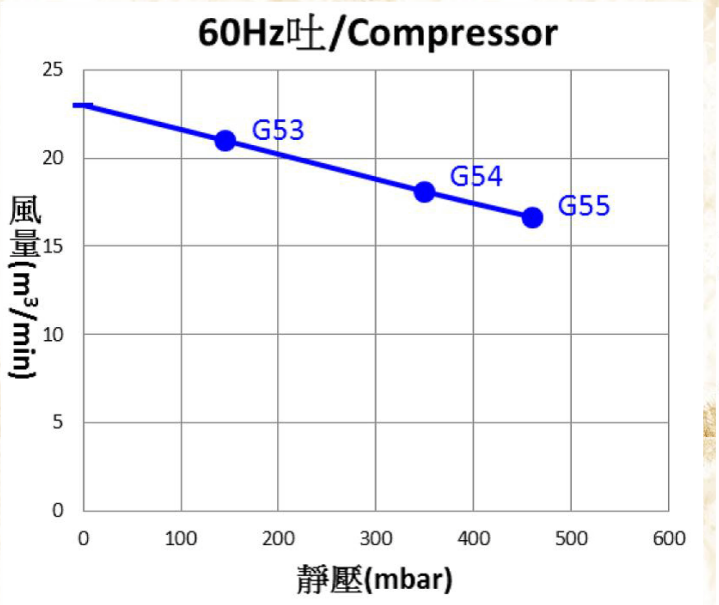

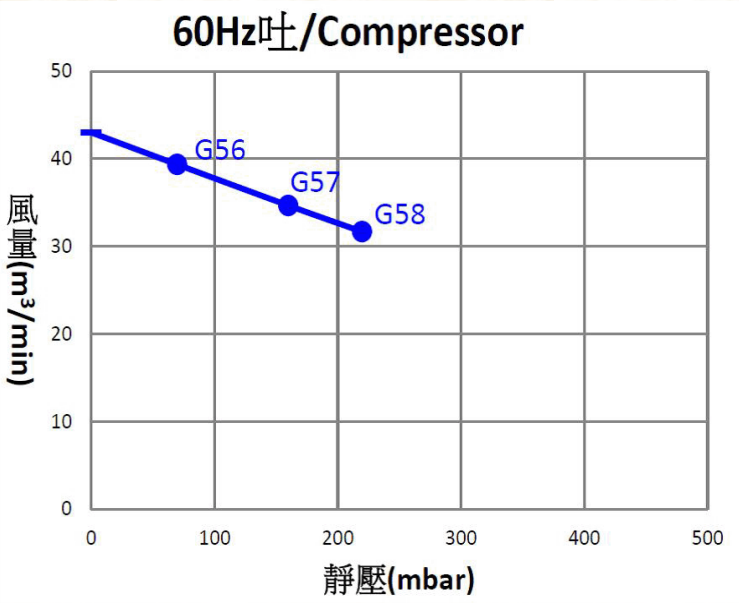

Model	Curve No.	Frequency	Output	Voltage	Current	Vacuum / Compressor	Max Airflow	Noise	Weight
		(Hz)	(kW)	(V)	(A)	(mbar)	(m³/min)	(dB)A	(Kg)
HB-9310	G53	60	15	220-275Δ/380-480Y	51.5Δ/29.8Y	220/145	23	84	161
HB-9315	G54	60	25	220-275Δ/380-480Y	76.0Δ/44.0Y	400/350	23	84	184
HB-9320	G55	60	29	220-275Δ/380-480Y	92.0Δ/53.2Y	400/460	23	84	201
HB-9410	G56	60	15	220-275Δ/380-480Y	51.5Δ/29.8Y	950/650	43	84	185
HB-9415	G57	60	25	220-275Δ/380-480Y	76.0Δ/44.0Y	190/160	43	84	208
HB-9420	G58	60	29	220-275Δ/380-480Y	93.5Δ/53.2Y	270/220	43	84	225

Single Stage

HB 129 Series

HB 229 Series

HB 329 Series

HB 429 Series

HB 529/629 Series

HB 729/829 Series

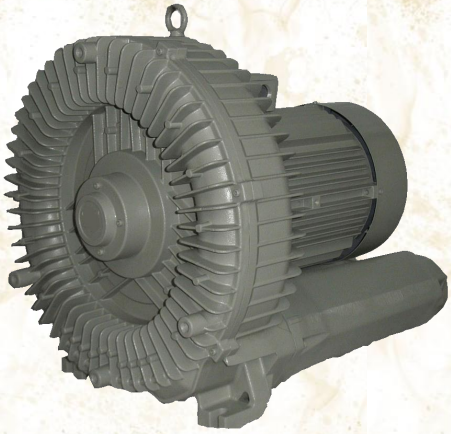

HB 919/929/939

Dimension

HB 129 Series

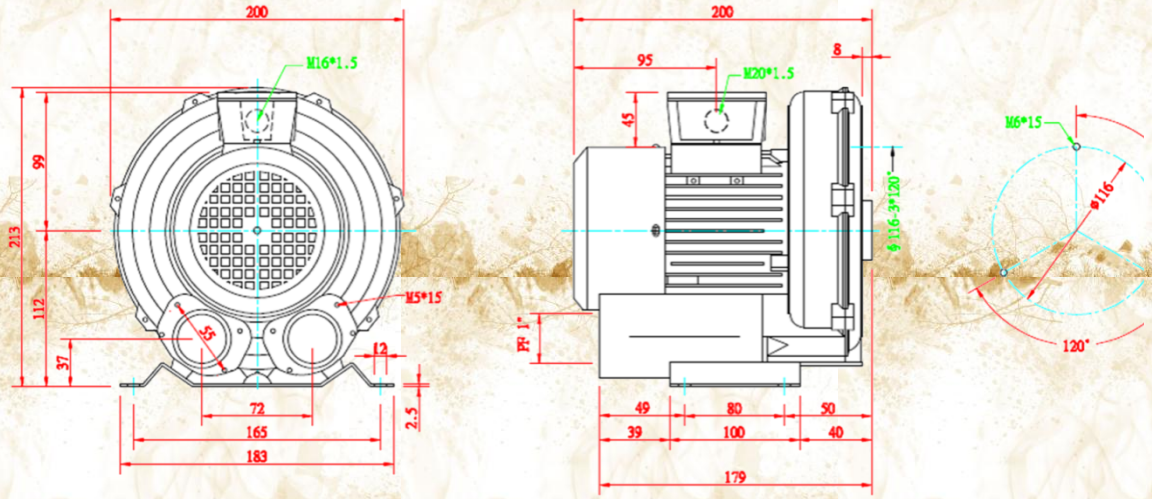

HB 229 Series

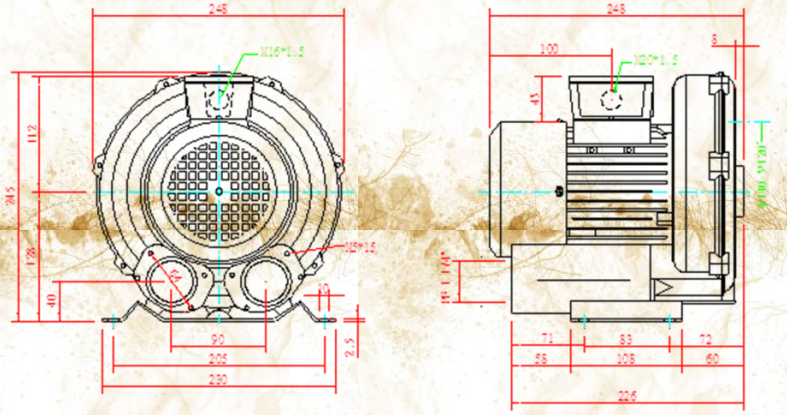

HB 229 L

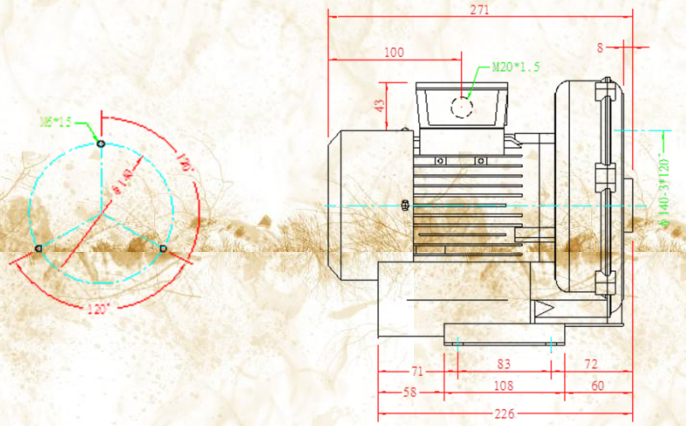

HB 329 Series

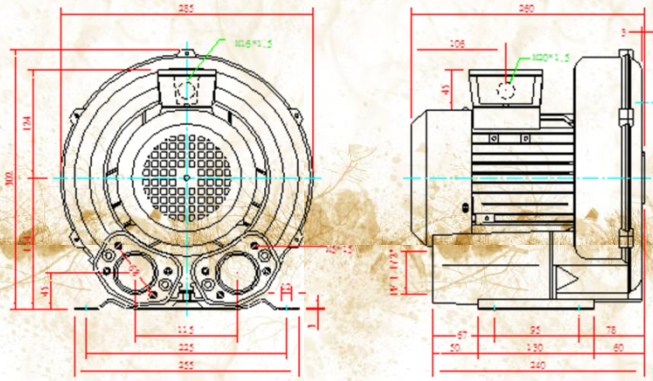

HB 329 L

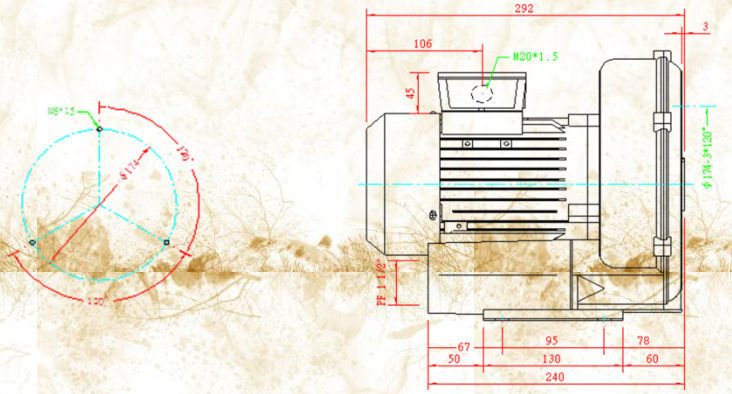

HB 429 Series

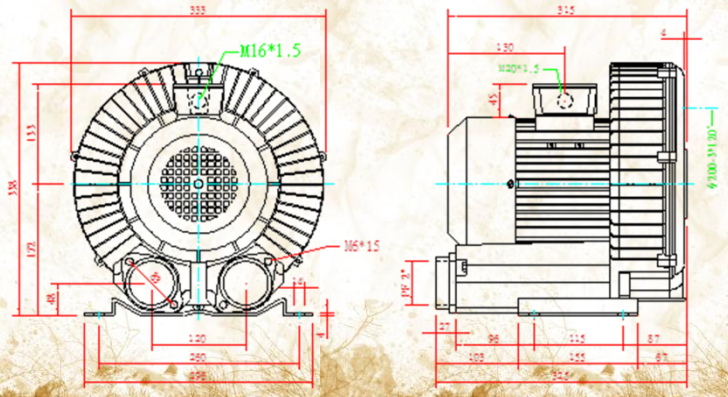

HB 429 L

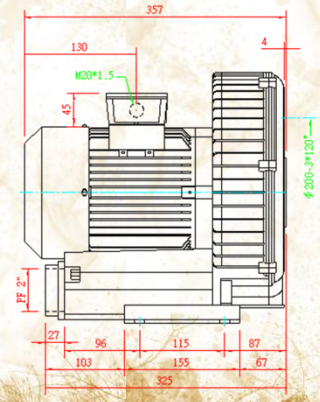

HB 529/629 Series

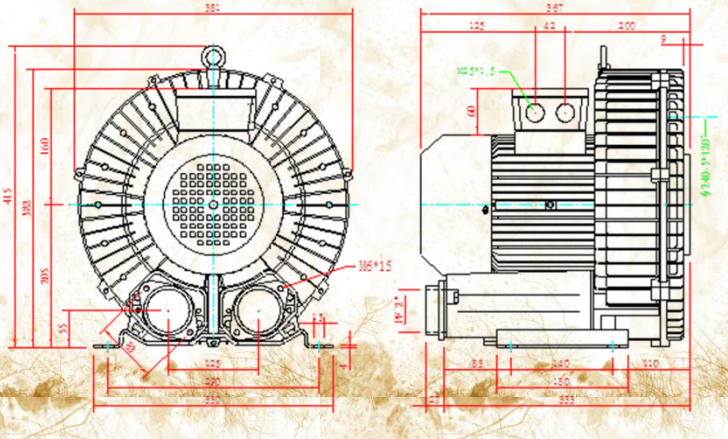

HB 529/629 L

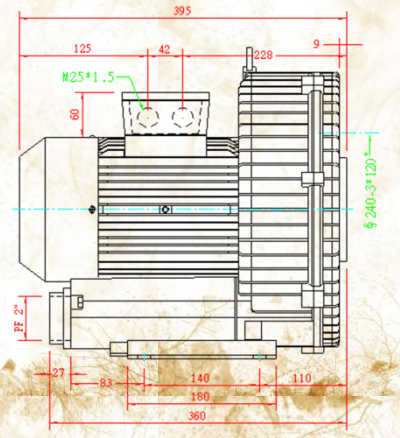

HB 729/829 Series

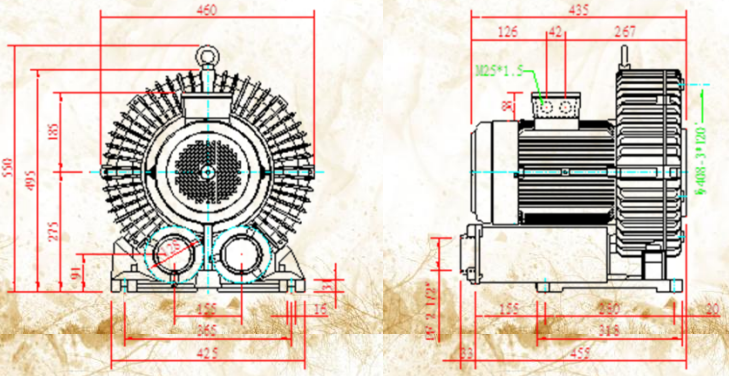

HB 729/829 L

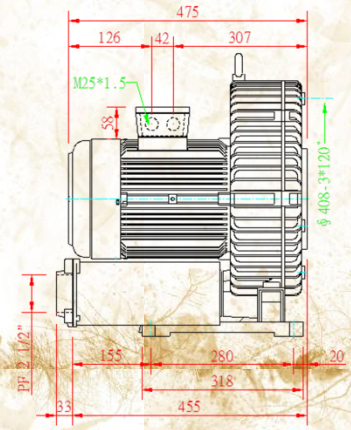

HB 919/929/939

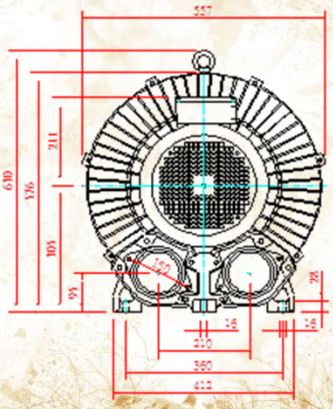

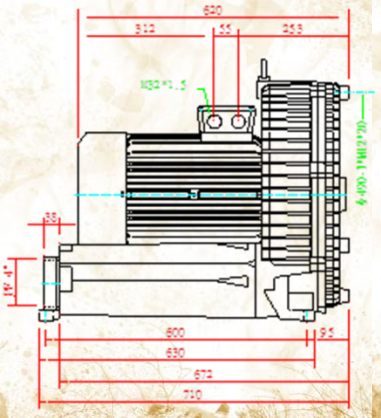

Double Stage

HB 23 Series

HB 33 Series

HB 43 Series

HB 63 Series

HB 64 Series

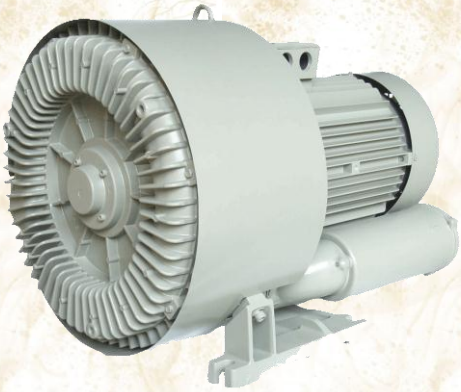

HB 83 Series

HB 84 Series

HB 93 Series

HB 94 Series

Dimension

HB 2308 Serial

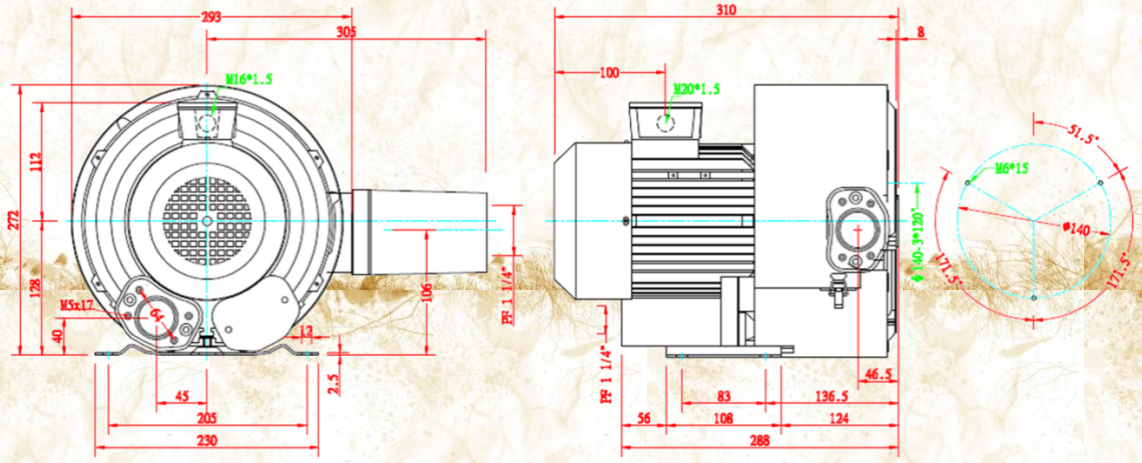

HB 33 Serial

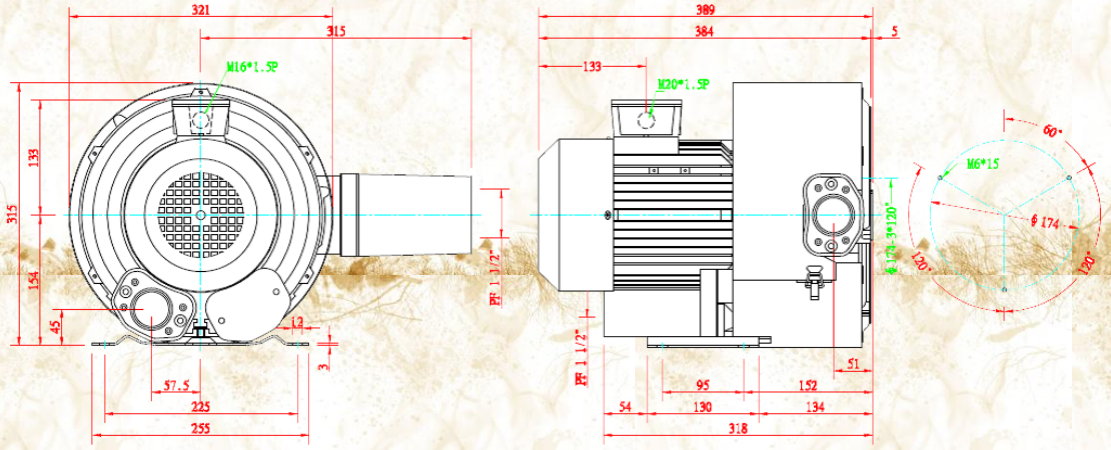

HB 43 Serial

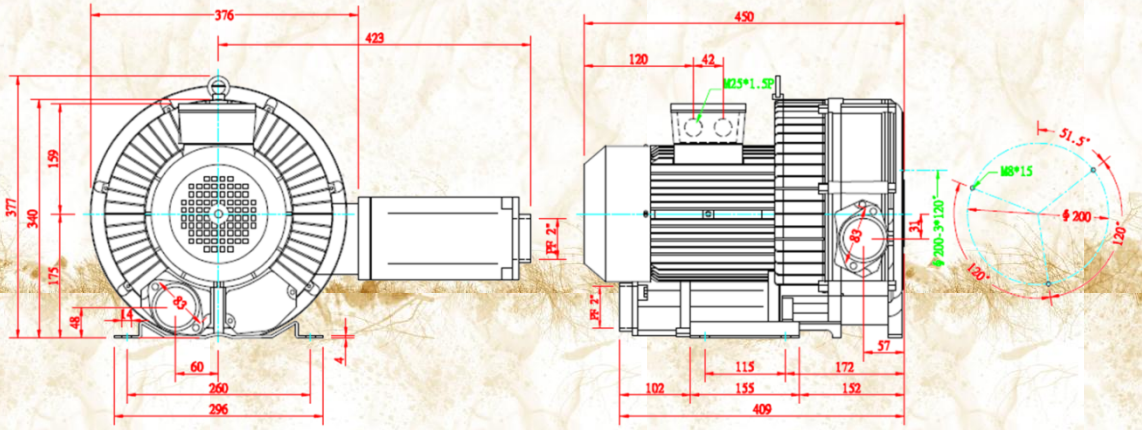

HB 63 Serial

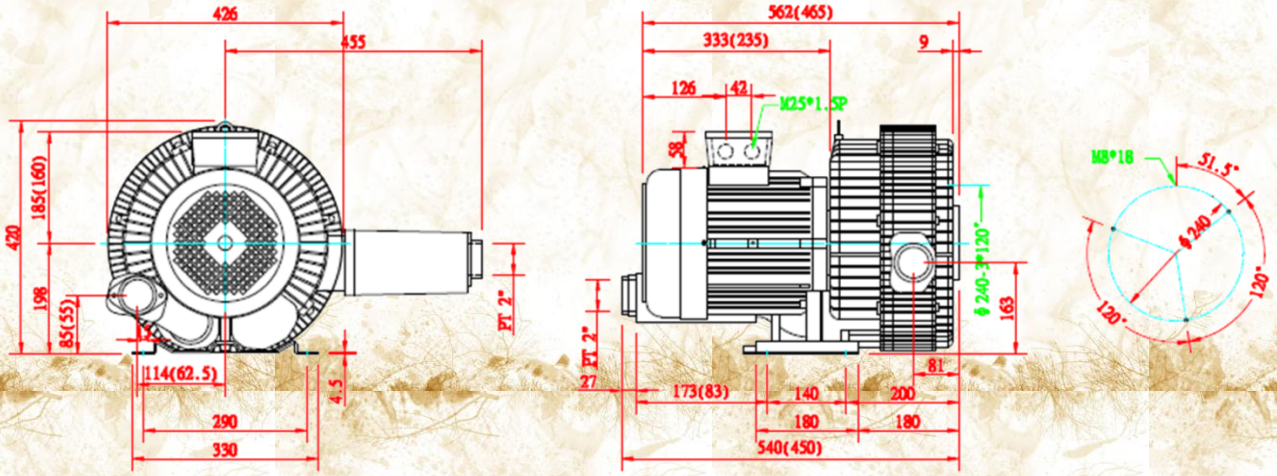

HB 64 Serial

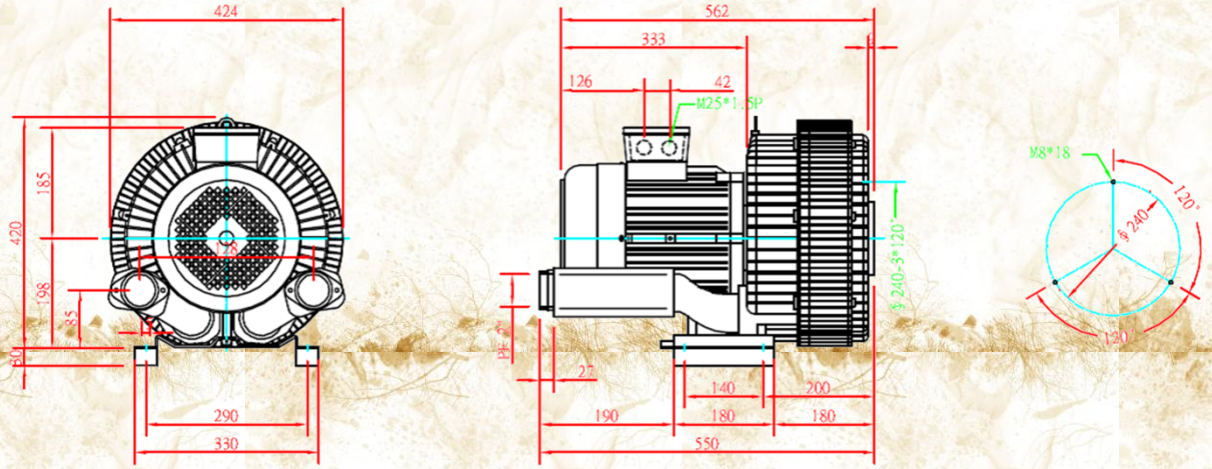

HB 83 Serial

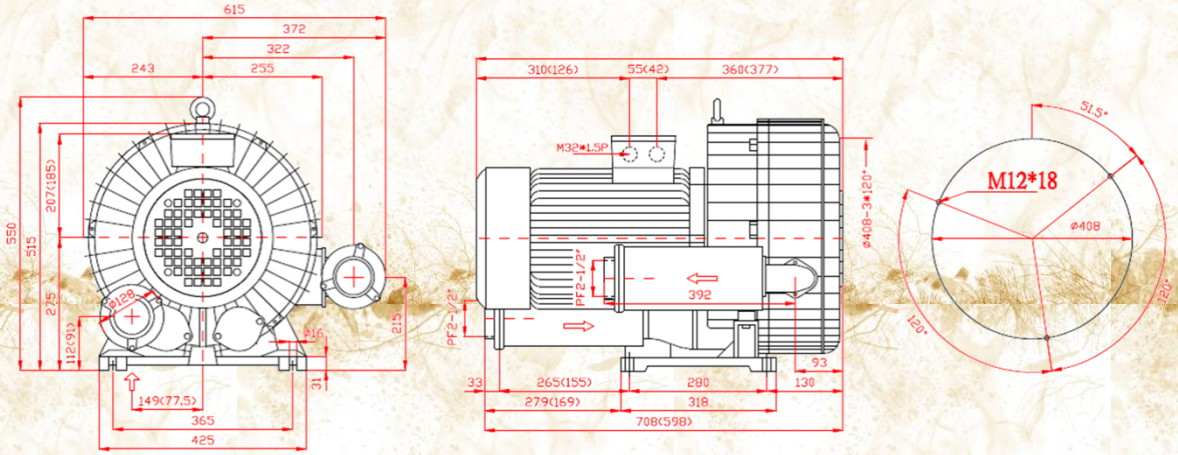

HB 84 Serial

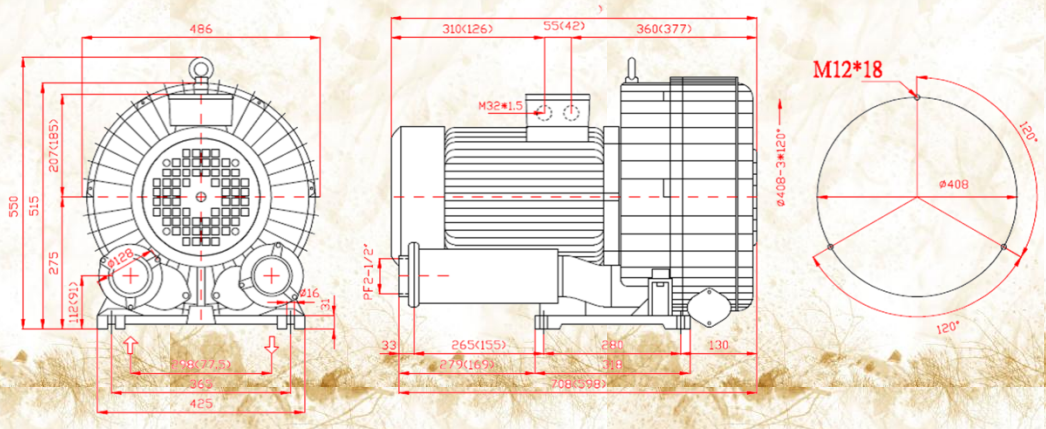

HB 93 Serial

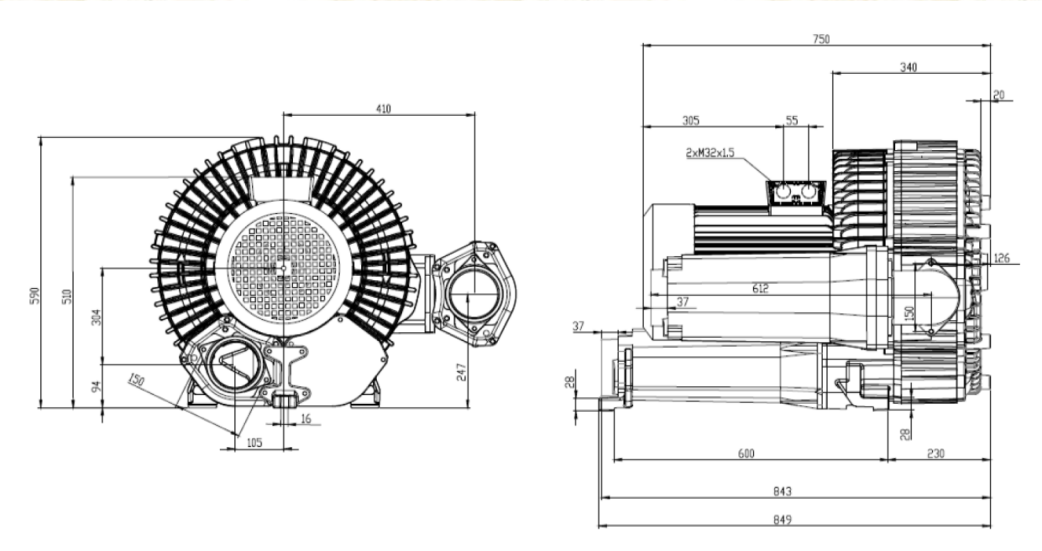

HB 94 Serial

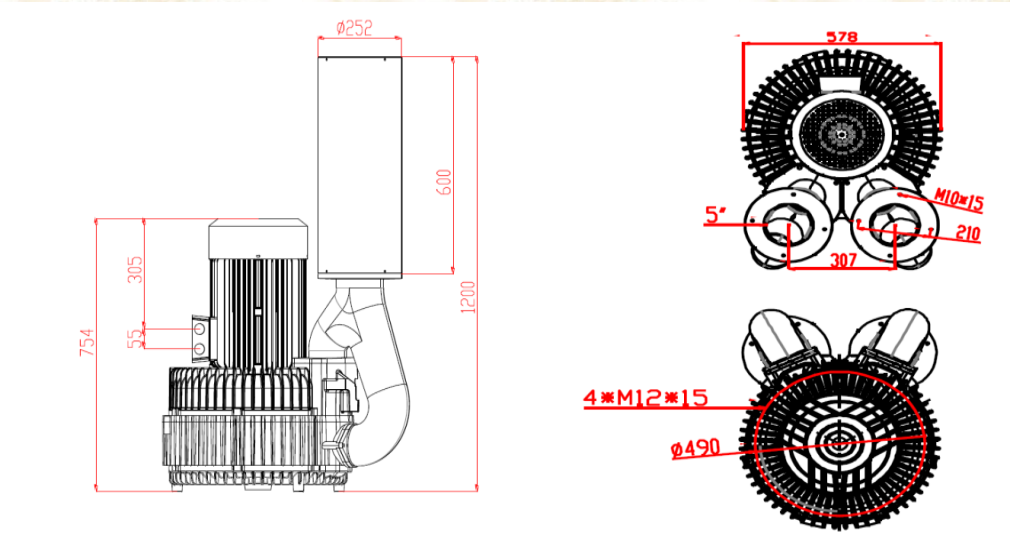

V-Belt Blower

Single Stage

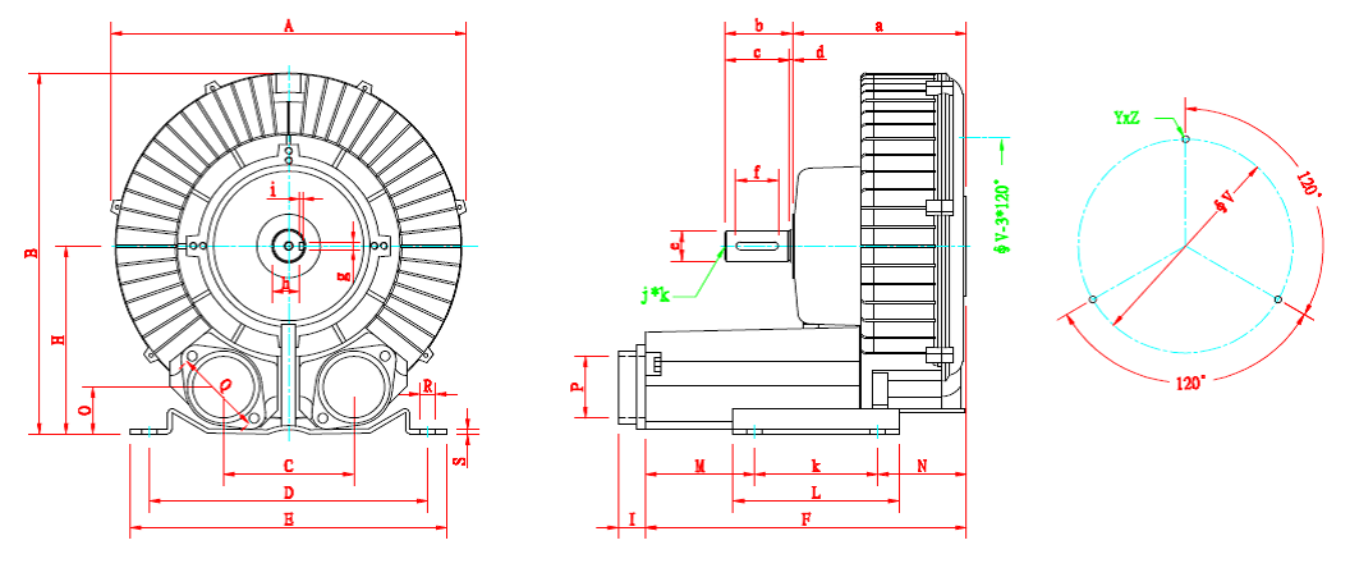

MODEL	A	B	C	D	E	F	H	I	K	L	M	N	O	P	Q
HB-201	248	245	90	205	230	226	128	-	83	108	71	72	40	PF 1	64
HB-301	285	302	115	225	255	240	154	-	95	130	67	78	45	PF 1	68
HB-401	333	338	120	260	296	298	172	27	115	155	96	87	48	PF 2"	83
HB-601	381	415	125	290	330	333	205	27	140	180	83	110	55	PF 2"	83
HB-801	460	550	155	365	425	455	275	33	280	318	155	20	91	PF 2	ϕ 128
HB-901	557	630	210	360	412	672	305	38	600	630	-	95	95	PF 4"	150
MODEL	R	S	ϕV	V-HOLE	Y*Z	a	b	c	d	e	f	g	h	i	j*k
HB-201	ϕ	2.5	ϕ	0°/120°/240°	M6*15	117	53	50	3	24	40	8	20	4	M8*20
HB-301	ϕ	3	ϕ	0°/120°/240°	M6*15	113	53	50	3	24	40	8	20	4	M8*20
HB-401	ϕ	4	ϕ	0°/120°/240°	M8*15	162.5	63	60	3	28	40	8	24	4	M8*20
HB-601	ϕ	4.5	ϕ	0°/120°/240°	M8*15	179.5	63	60	3	28	40	8	24	4	M8*20
HB-801	16	31	ϕ	0°/120°/240°	M12*15	268	83	80	3	42	60	10	38	4	M10*30
HB-901	16	28	ϕ	0°/120°/240°	M12*20	303.5	113	110	3	42	90	14	37.5	4.5	M10*30

Double Stage

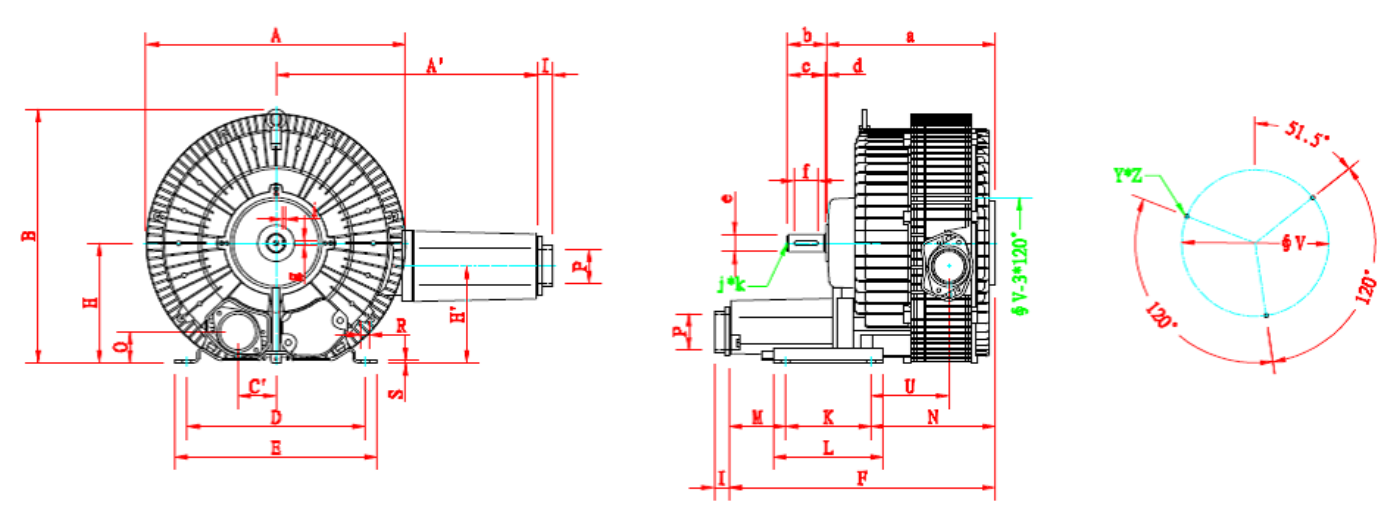

MODEL	A	A'		B	C'	D	E	F	H	H'	I	K	L	M	N
HB-2301	284	305		272	45	205	230	288	128	106	-	83	108	71	136.5
HB3301	321	315		315	57.5	225	255	318	152	152	-	95	130	67	152
HB-4301	364	396		377	60	260	296	382	175	144	27	115	155	96	172
HB-6301	424	428		420	62.5	290	330	423	205	163	27	140	180	83	200
HB-8301	486	372		550	77.5	365	425	565	275	215	33	280	318	155	130
MODEL	Q	R	S	U	ϕV	V-HOLE	Y*Z	a	b	c	d	e	f	g	h
HB-2301	64	ϕ 10	2.5	90	ϕ 140	51.5°/171.5°/291.5°	M6*15	180	53	50	3	24	40	8	20
HB-3301	68	ϕ 12	3	101	ϕ 174	60°/180°/300°	M6*15	189	53	50	3	24	40	8	20
HB-4301	83	ϕ 14	4	115	ϕ 200	51.5°/171.5°/291.5°	M8*15	248	63	60	3	28	40	8	24
HB-6301	83	ϕ 15	4.5	119	ϕ 240	51.5°/171.5°/291.5°	M8*15	275.5	63	60	3	28	40	8	24
HB-8301	ϕ	16	31	37	ϕ 408	51.5°/171.5°/291.5°	M12*15	376.5	83	80	3	42	60	10	38

Accessories

Pressure Relief

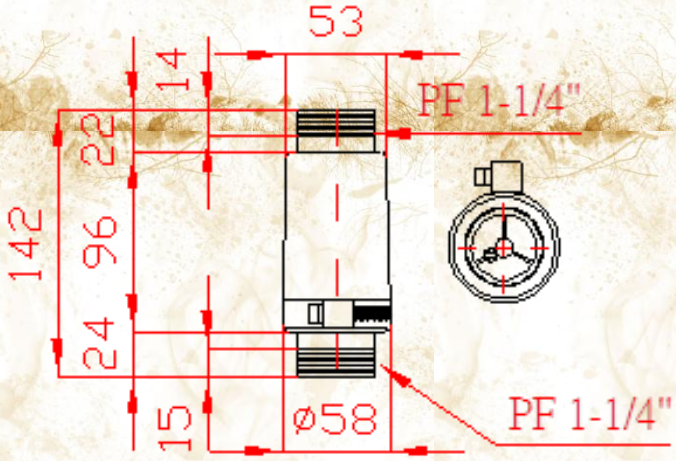

Type	PF	L (mm)	Dimension
RV-01	1 1/4"	142	0~300mbar
RV-02	1 1/4"	142	300~600mbar

Silencer

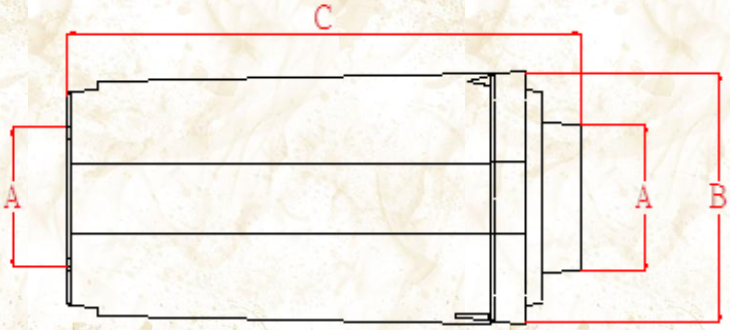

Type \ Symbol	A	B (mm)	C (mm)
SI-01			180
SI-02	PF 1 1/4"	83	180
SI-03	PF 1 1/2"	98	266
SI-04	PF 2"	117	325

MF Type Suction Filter

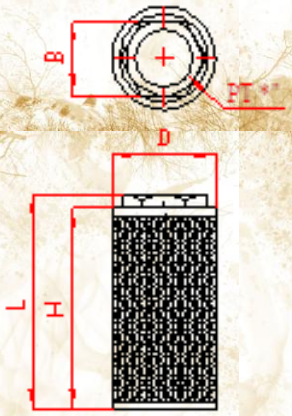

Type \ Symbol	PT	D (mm)	L (mm)	H (mm)	B (mm)	Filtration mesh	Weight (kg)
MF-08	1"	58	170	155	42	100	0.20
MF-10	1 1/4"	71	186	170	54	100	0.35
MF-12	1 1/2"	85	196	182	65	100	0.49
MF-16	2"	103	215	202	75	100	0.65
MF-20	2 1/2"	148	274	252	97	100	1.20
MF-32	4"	208	380	357	142	100	2.45

Threaded Flange (mm)

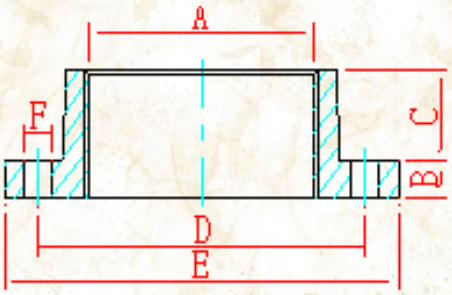

Type \ Symbol	A	B	C	D	E	F
2-011	PF 1 1/4"	7	22	64	79	6
3-011	PF 1 1/2"	7	24	68	86	6
6-011	PF 2"	7	18	83	100	7
8-011	PF 2 1/2"	15	16	Ø128	144	7
9-011	PF 4"	8	22	150	170	9

Three Pipe (mm)

TP-01

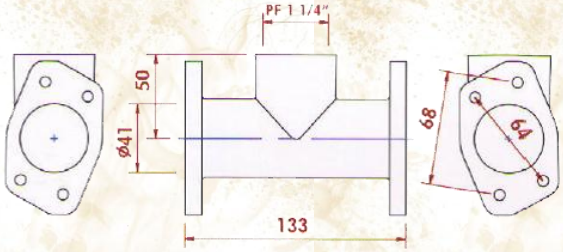

TP-02

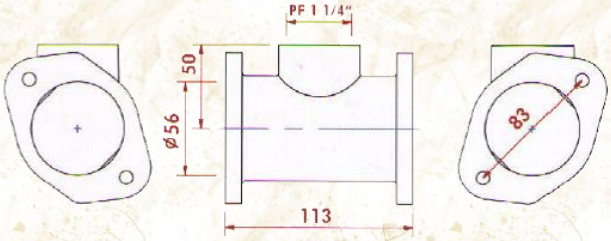

Type	Suitable Application
TP-01	HB229,329,HB23,33 Serial
TP-01	HB229,329,HB23,33 Serial

Footprint Dimensions for Vertical/Horizontal Mounting

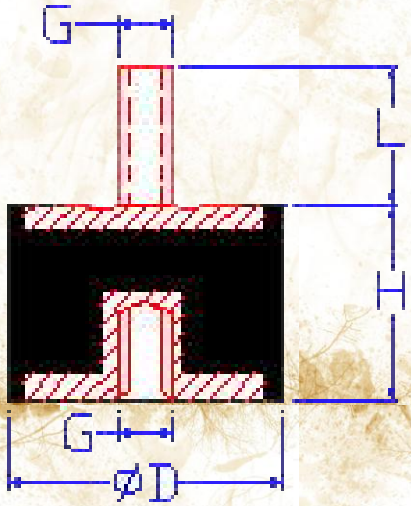

Type	D	H	G	L
MFB2520	25	20	M6	12
MFB3025	30	25	M8	15
MFB7540	75	40	M12	20
MFB7545	75	45	M12	37

New Winstar Enterprise Co., Ltd.

5F-4, No.160 Zhong Zheng Road, Zhonghe District, New Taipei City, Taiwan

Tel: 886-2-22426802 | Fax: 886-2-22424364

E-mail: motor.world@msa.hinet.net | Website: http://www.ecoair.com.tw